magic Mobility™

POWERCHAIR

OWNER'S MANUAL

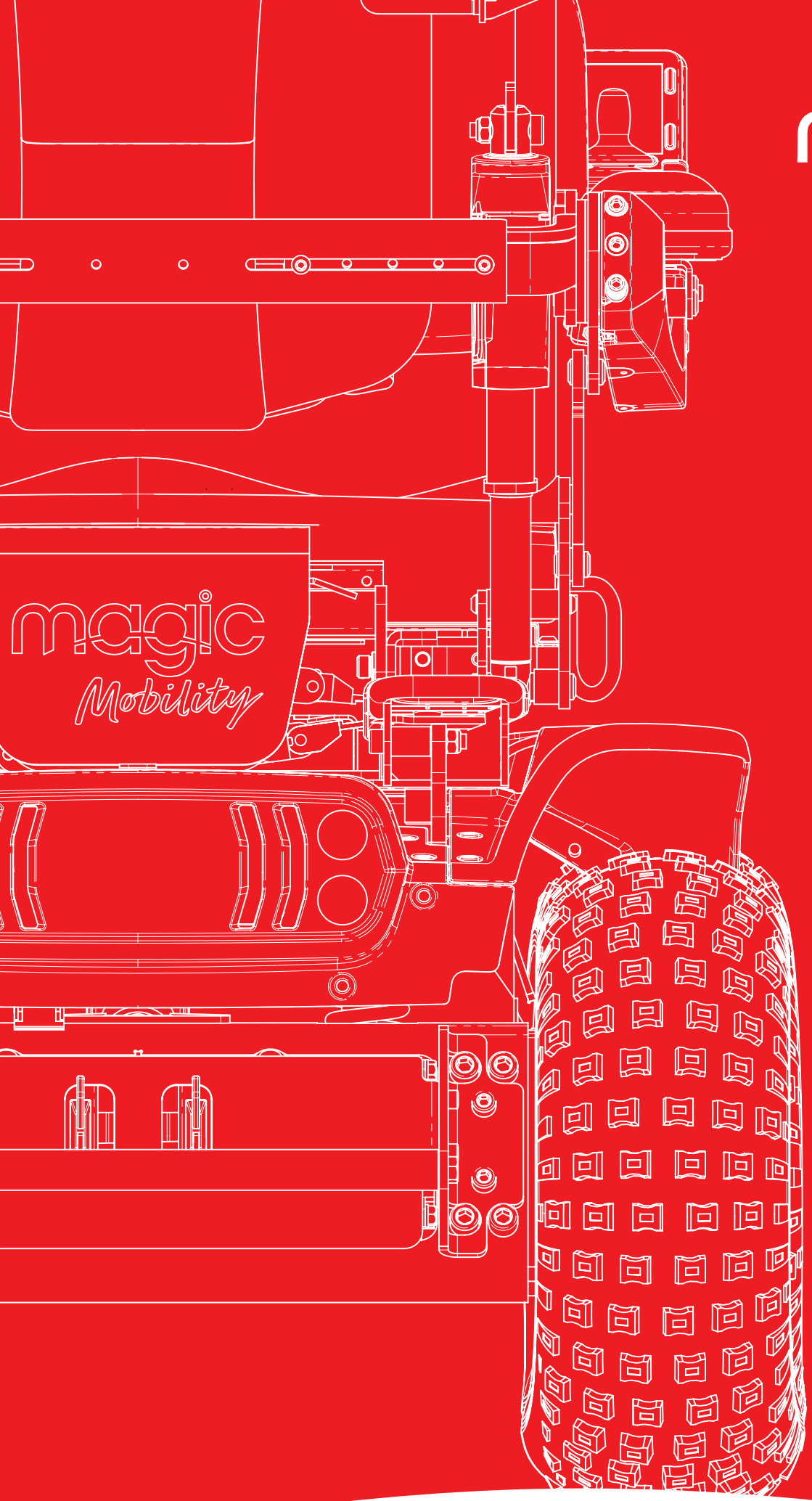

ENGLISH
EN_AU VERSION

SUNRISE MEDICAL®

Freedom to be more you

We are so excited to see you embrace your independence and make the most of your challenges. It won't be long before your Magic Mobility powerchair is a part of you, and you're pushing the boundaries to see where life can take you.

There are a couple of things you need to remember about your Magic Mobility powerchair. Treat your chair well, and we know it will reward you with discovery, freedom and the ability to be you. Most of the time we'll tell you to rewrite the rules of the world around you, but there are a few rules about your chair that will keep you active and out there for the longest possible time.

We're here to help

- We know that having a healthy, operational chair is crucial to you
- If you need help, repairs or parts always contact the agent where you bought your product
- A list of important contacts can be found on our website: www.magicmobility.com.au
- Sunrise Medical and Magic Mobility are certified to ISO 13485 and ISO 14001
- Sunrise Medical and Magic Mobility comply with the Medical Device Regulation (EU) 2017/745.

Please note: Powerchair colours and options depicted in the images of this Powerchair Owner's Manual may not be available in your region. Nomenclature in your region may vary from the Powerchair Owner's Manual. However, the core functionality, performance and safety of the powerchair remained unchanged.

Explore with us

Love your batteries

Your batteries are precious and expensive to replace.

- Follow the instructions for charging the batteries
- Fully charge them everyday
- If you need to store your chair for an extended period, ensure that it's fully charged and then recharged every month
- Only use the supplied charger
- Refer to Section 6 to learn more.

Care for your chair

- Check your joystick daily
- Maintain weekly and monthly checks which are outlined in Section 7.17-7.18
- Have your agent give your chair an annual check-up.

Maintain the right pressure

- The right tyre pressure will help you achieve top performance
- Under inflated tyres result in more punctures, less stability and range
- Over inflated tyres make for a rugged ride and increase tyre wear and tear
- Lower tyre pressure provides better traction when travelling off-road
- Refer to Sections 7.1-7.7 to learn more. Many people are surprised by the low pressures required for great off-road performance.

Know your serial number

- You'll find it on the base
- Make a note of it for future reference; a serial number card is attached to your new chair for your wallet or purse
- Quote your serial number when booking a repair, service or reporting problems
- More information is in Section 2.1.

Warnings on water

- Never drive through water, into rivers, creeks or the sea (that goes for showers and saunas too!)
- Your powerchair and joystick are not waterproof
- If your powerchair meets water, snow or mist, allow to dry in a warm room
- Carry a plastic sleeve to cover your joystick
- Refer to Section 7 to learn more.

Safety is paramount

- A powered wheelchair is a motorised vehicle, and you must **ALWAYS FOLLOW THE DIRECTIONS FOR USE**
- Never travel alone when going off the grid
- Always tell someone your plans
- Take your phone and use location apps
- Consider a set of puncture resistant tyre liners for your tyres and a spares kit for emergencies (jack, wheel and tools)
- Refer to Section 3 to learn more.

Contents

1 IMPORTANT WARRANTY INFORMATION 6

2 POWERCHAIR FEATURES 8
2.1 Nameplate 8
2.2 Other symbols used in owner's manual and serial cards (applicable to the destination of the product) 8
2.3 Serial number locations 9
2.4 Features 9
2.5 Indications for use 11
2.6 Standards testing 11
2.7 MRI Safety information 11
2.8 Common positioning options 11
2.9 Important definitions 11
2.10 Medical device combinations 12
2.11 Other available documentation 12
2.12 Product safety notices and recalls 12

3 SAFETY 13
3.1 General 13
3.2 Transfers 13
3.3 Reaching and leaning 13
3.4 Dressing 13
3.5 Weight limit 14
3.6 Bags and backpacks 14
3.7 Non-Magic Mobility parts and third party adaptations 14
3.8 Trapping hazards 14
3.9 Inadvertent movement 14
3.10 Safety checklist 14
3.11 Driving 15
3.12 Cornering 15
3.13 Slopes and ramps 15
3.14 Driving in reverse 15
3.15 Street use 15
3.16 Driving at night 16
3.17 Driving while elevated 16
3.18 Motor overheating and damage 16
3.19 Terrain 16
3.20 Obstacles, steps and kerbs 16
3.21 Stairs and escalators 17
3.22 Environmental conditions 17
3.23 Powerchair lifts 17
3.24 Motor vehicle safety 17
3.25 Drugs and alcohol 17
3.26 Alcohol, drugs and smoking 17

4 OPERATING INSTRUCTIONS..... 18
4.1 Adjustments 18
4.2 Armrests 18
4.3 Assignable button controls 18
4.4 Batteries 18
4.5 Cushions 18
4.6 Fasteners 18
4.7 Footplates 18
4.8 Legrests 19
4.9 Fold Forward - if fitted 20
4.10 Freewheel mode – pushing the powerchair 21
4.11 On/off switch 22
4.12 Push handles 22
4.13 Positioning belts 22
4.14 Power positioning functions 22
4.15 Seating 23
4.16 Shock absorber springs (Magic 360 only) 23
4.17 Slope sensor (inclinometer) – if fitted 23
4.18 Steering lock option – if fitted (Extreme X8 only) 24
4.19 Transfer tilt - if fitted 24
4.20 Tyres 24
4.21 Upholstery 24

4.22 Wiring and connectors 24
4.23 Kneepads 24
4.24 Lateral supports 25
4.25 One Click Activator - if fitted 25

5 POSITIONING BELTS, TIE DOWNS AND TRANSPORTATION 26
5.1 Powerchair transportation in vehicles (as cargo) 26
5.2 Powerchair transportation in aeroplanes (as cargo) 26
5.3 Using your powerchair in trains 26
5.4 Powerchair lifts and hoists 26
5.5 Lifting your powerchair 26
5.6 Positioning belts and harnesses 28
5.7 Travelling in a vehicle while seated in your powerchair 28
5.8 Retractable docking pin – if fitted 32
5.9 Dahl docking system – if fitted 32

6 BATTERIES AND CHARGING 33
6.1 Electrical safety protection 33
6.2 Batteries 33
6.3 Battery charger 33
6.4 Battery care plan 33
6.5 Connecting the battery charger 34
6.6 Achieving maximum range from your batteries 34
6.7 Fully discharged batteries 34
6.8 Battery gauge 35
6.9 How your battery gauge works 35
6.10 Replacing batteries 35
6.11 Battery disposal and recycling 35
6.12 Battery isolation (XT2 and XT4 only) 35

7 CARE AND MAINTENANCE 36
7.1 Tyre pressure 36
7.2 Magic 360 and XT4 off-road drive wheels 36
7.3 Magic 360 and Frontier V6/V4 crossover drive wheels 37
7.4 Magic 360 and XT2 urban grey drive wheels and Frontier V6/V4 urban drive wheels 37
7.5 Magic 360 and XT2 urban black drive wheels 37
7.6 Frontier V6/V4 and Extreme X8 off-road drive wheels 38
7.7 Frontier V6/V4 castor wheels 38
7.8 Tyre puncture repair 38
7.9 Tyre wear 38
7.10 Caring for the body kit 38
7.11 Caring for upholstery 39
7.12 Caring for the joystick 39
7.13 Water warning 39
7.14 Corrosion protection 39
7.15 Storage 40
7.16 Daily checks 40
7.17 Weekly checks 40
7.18 Monthly checks 40
7.19 Annual checks 40
7.20 Servicing 41
7.21 Hygiene measures when being reused 41
7.22 Disposal 41

8 JOYSTICK CONTROLS 42
8.1 LED joystick module 42
8.2 LCD joystick module 42
8.3 Locking the control system 43

9 ELECTROMAGNETIC INTERFERENCE EMI 44

10 HOW DOES MY POWERCHAIR MEASURE UP? 45

11 TECHNICAL SPECIFICATIONS 46

ISO 7010-M002 - Instruction manual/booklet must be read!

If you are visually impaired, this document can be viewed in pdf format at www.magicmobility.com.au

Important warranty information

WARRANTY TERMS

Commencement of warranty period

The warranty period begins on the date that the product is first received by the customer, or thirty (30) days from the shipping date from Magic Mobility, whichever comes first.

Repair and replacement

Customers should contact the agent from whom the product was purchased. Magic Mobility will, at our discretion, repair/replace items that are considered faulty at time of manufacture.

The availability of replacement units is subject to the discretion of the agent, not the manufacturer. For more information regarding replacement units, contact your Magic Mobility agent.

Voiding of warranties

Installation of components by an unauthorised agent will void the warranty. If non-Magic Mobility parts are used or installed, it may void the warranty and affect the powerchair's performance.

Servicing to controllers or other electronic equipment must be carried out by an authorised agent. Any attempt to open or dismantle these items will void the warranty.

Non-transferable warranty: The protection under all warranties described is provided to the original powerchair owner only (first owner), as registered with Magic Mobility or a Magic Mobility Authorised representative or agent. Warranties are not transferable to any subsequent powerchair owner who acquires the powerchair.

Batteries

Gradual deterioration in battery performance due to being left in a discharged state or left in poor conditions (extreme temperatures, unclean or damp environments) is not covered under warranty.

Your powerchair is not covered under warranty if it is submerged in water or is exposed to corrosive liquids. Please note that salt water is considered highly corrosive and proper cleaning care and maintenance as described in this manual should be followed.

Extension of warranties

Warranty must not be altered, waived or extended. An extension to the warranty period is authorised by Magic Mobility on Magic Mobility documentation.

LIFETIME LIMITED WARRANTY

The expected product life is five (5) years.

Magic Mobility provides a warranty for the frame, bogie and trailing arms, and forks against defects in materials and workmanship for five years from date of first consumer purchase.

ONE YEAR WARRANTY

The Magic Mobility powerchair is under full warranty for the first twelve (12) months from the commencement date. This warranty does not detract from, but is in additional to your legal rights.

WARRANTY EXCLUSIONS

- Damage or corrosion due to misuse, accidents or alterations.
- General wear and tear (tyres, batteries, upholstery, scratches, damage).
- Accidents, including collision, fire, theft and riot.
- Alterations including modification and tampering.
- Repairs performed, or replacement parts installed by any person other than an Authorised Agent.
- A replacement part or accessory not conforming to Magic Mobility's specification.

REPLACEMENT/REPAIR PARTS WARRANTY EXCLUSIONS

Parts replaced under the warranty period are solely covered for the original warranty period of the powerchair.

SPARE PARTS WARRANTY

- Spare parts under the warranty period (current models): There is no extended warranty for parts.
- Spare parts outside the warranty period (current models): A replacement may be offered, but has a limited 60-day warranty.
- Spare parts (legacy models): A replacement may be offered, but has a limited 30 day warranty.
- Electrical parts: A replacement may be offered, but Magic Mobility has a limited 30 day warranty.

Magic Mobility will take reasonable steps to ensure that spare parts are available for 5 years after a model has been upgraded.

Upon acceptance of goods at delivery the purchaser accepts the "Terms & Conditions of Sale".

Australian Consumers only

Magic Mobility goods come with guarantees that cannot be excluded under the Australian Consumer Law. You are entitled to a replacement or refund for a major failure and for compensation for any foreseeable loss or damage. You are also entitled to have the goods repaired if the goods fail to be of acceptable quality and the failure does not amount to major failure.

Powerchair features

The powerchairs described in this manual may not be the exact same in every detail as yours. All instructions are still entirely relevant. Magic Mobility reserves the right to alter without notice any weights, measurements or technical data published in this manual. As each powerchair is built to order, variations to the published information can be expected. The images below will help you identify some of the features referred to throughout this manual.

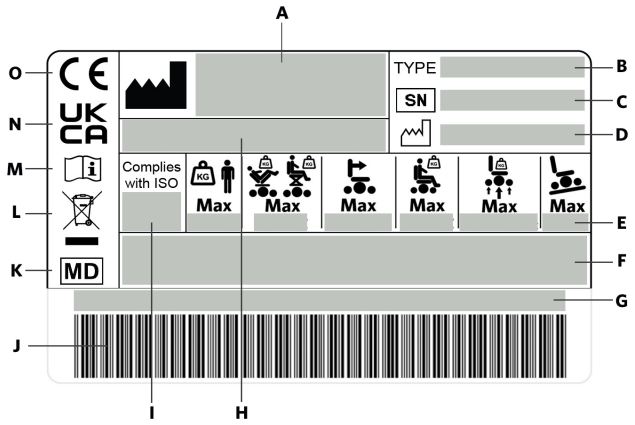

Figure 2.1 Serial card example

2.1 Nameplate

A		Manufacturer's name and address	I	Complies with ISO	Crash tested according to ISO 7176-19:2008
B	TYPE	Product name and model	J	Barcode	
C	SN	Serial number of the wheelchair	K	MD	This symbol means Medical Device
D		Date of manufacture	L		Indicates electrical / electronic equipment must be disposed of in accordance with the WEEE directive
F	Medical device		M		Consult instructions for use
G	Unique Device Identification (UDI)		N	UK CA	UK CA Mark
H	Corporate logos		O	CE	CE Mark

	XT2	XT4	360	X8	V6	V4 FWD	V4 RWD	DESCRIPTION
E	Max 10°	Max 10°	Max 10°	Max 10°	Max 10°	Max 6°	Max 6°	Maximum safe slope with anti-tip wheels fitted. Depends on wheelchair setting, posture and physical capabilities of the user.
	Max 136kg	Max 182kg	Max 160kg	Max 182kg	Max 182kg	Max 182kg	Max 182kg	Maximum user weight (including luggage)
	Max 136kg	Max 160kg	Max 160kg	Max 160kg	Max 160kg	Max 160kg	Max 160kg	Maximum user weight with powered seat function
	Max 350kg	Max 400kg	Max 350kg	Max 370kg	Max 370kg	Max 370kg	Max 370kg	Maximum combined user and chair weight
	Max 10km/h	Max 10km/h	Max 10km/h	Max 10km/h	Max 10km/h	Max 10km/h	Max 10km/h	Maximum speed
	Max 350/350kg	Max 400/400kg	Max 115/350/115kg	Max 350/350kg	Max 115/350/115kg	Max 115/350kg	Max 350/115kg	Maximum axle loading

2.2 Other symbols used in owner's manual and serial cards (applicable to the destination of the product)

UK RP	UK Responsible Person	CH REP	Authorised Representative for Switzerland
EC REP	EU Authorised Representative		Importer's address

2.3 Serial number locations

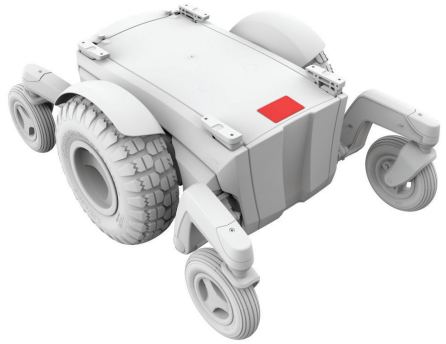

Figure 2.2a Magic 360

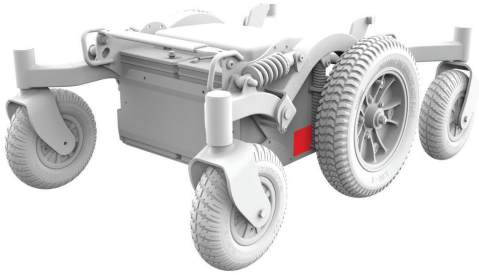

Figure 2.2b Frontier V6

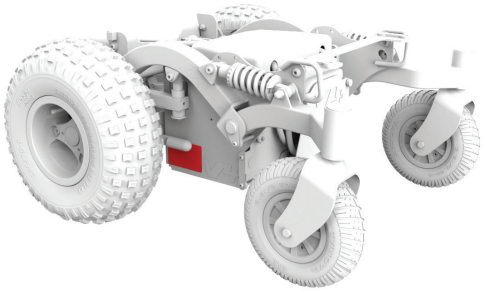

Figure 2.2c Frontier V4 RWD

2.4 Features

Figure 2.3a Magic 360

Figure 2.3b Frontier V6

Figure 2.3c Frontier V4 RWD

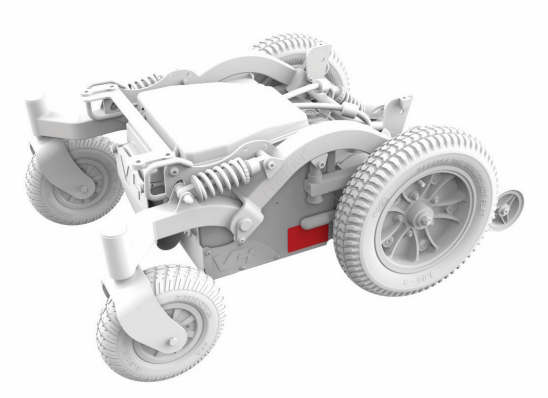

Figure 2.2d Frontier V4 FWD

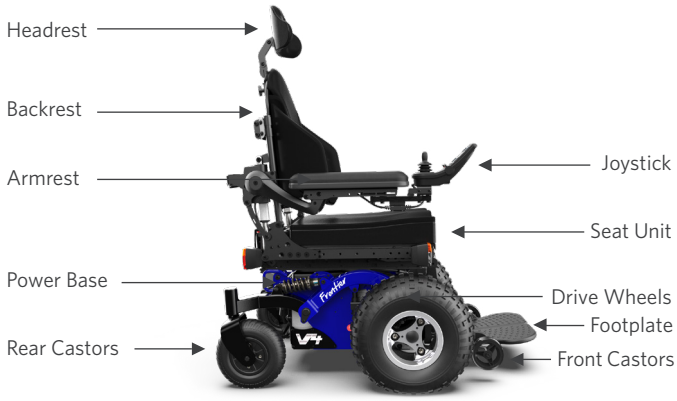

Figure 2.3d Frontier V4 FWD

Figure 2.2e Extreme X8

Figure 2.3e Extreme X8

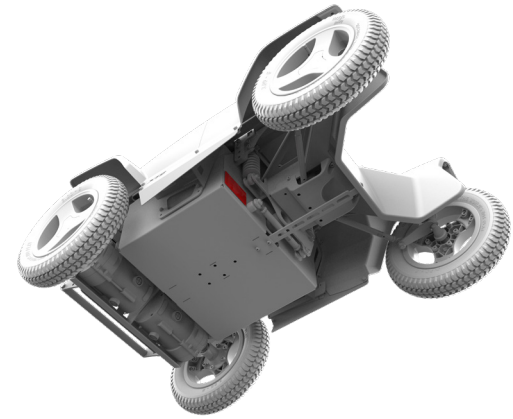

Figure 2.2f XT2

Figure 2.3f XT2

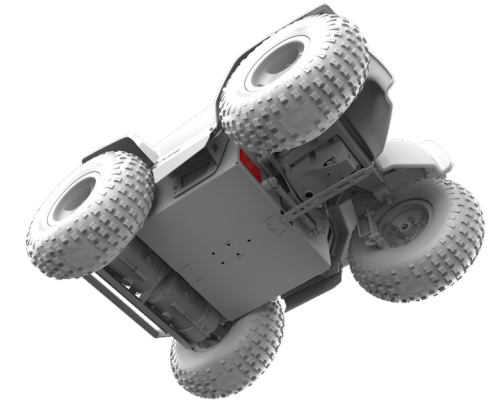

Figure 2.2g XT4

Figure 2.3g XT4

2.5 Indications for use

The Magic Mobility power wheelchairs are battery-operated devices with wheels. They are intended for medical purposes to provide mobility to persons restricted to a sitting position who have the capability of operating a power wheelchair.

Indications

The varieties of fitting variants, as well as the modular design, mean that it can be used by those who cannot walk or have limited mobility because of:

- Paralysis
- Loss of extremity (leg amputation)
- Extremity defect deformity
- Joint contractures/joint injuries
- Illnesses such as heart and circulation deficiencies, disturbance of equilibrium or cachexia, as well as for elderly people who still have strength in the upper body.

Contraindications

The wheelchair shall not be used in case of:

- Perception disorder
- Imbalance
- Seating disability

2.6 Standards testing

Magic Mobility powerchairs have been tested to international standards and meet all medical device requirements. If required, information regarding the powerchair's performance attributes and controlled testing results can be obtained from Magic Mobility.

Magic Mobility powerchairs are tested and only suitable for wheelchair users weighing more than 22kg.

EN12182: 2012/EN12184:2022	Class B	Class C
Magic 360	YES	YES
Extreme X8	YES	YES
XT2 *(not sold in USA/CAN)*	YES	YES
XT4	YES	YES
EN12182: 2012/EN12184:2014	Class B	Class C
Frontier V6 AT and Urban	YES	YES
Frontier V6 Compact *(not sold in USA/CAN/EU)*	YES	NO
Frontier V4 RWD	YES	NO
Frontier V4 FWD	YES	NO

2.7 MRI Safety information

Our powerchairs are MR unsafe and should remain outside the MRI scanner room.

2.8 Common positioning options

Seat positioning	**Power lift and tilt** **Power tilt** **Fixed**
MPS seating	**MPS seat, backrest and headrest**
Rehab seating	**Fixed canes** **Manual recline canes** **Powered recline canes** **Anti-shear powered recline canes**
Magic rehab insert backrest	**All sizes including MPS style insert backrests**
Armrest	**Standard** **Flexi (flip up)**
Legrest	**Centre mounted** **Centre power elevating** **Swingaway** **Swingaway power elevating**
Plus many other accessories	

2.9 Important definitions

This warning symbol refers to hazards or unsafe practices that may cause severe injury or death to you or to other persons.

Many hazards are described throughout the manual. Please pay close attention to Section 3 - Safety, Section 4 - Operating Instructions, Section 6 - Batteries and Section 9 – Electromagnetic Interference.

This symbol refers to disposal and recycling. Please refer to Section 7.21.

This symbol refers to ESD (Electrostatic Discharge) which can damage printed circuit boards.

LATEX No component of this powerchair was made with natural rubber latex.

Special adaptations (POA)

Magic Mobility strongly recommends that in order to ensure that your product operates, and performs as intended by the manufacturer; all the user information supplied with your product is read and understood, before the product is first used.

Magic Mobility also recommends that the user information is not discarded after reading it, but kept safely stored for future reference.

2.10 Medical device combinations

It may be possible to combine this Medical device with one or more other Medical Device or other product. Information on which combinations are possible can be found at www.magicmobility.com.au. All combinations listed have been validated to meet the General Safety and Performance Requirements, Annex I Nr. 14.1 of the Medical Device Regulation 2017/745.

Guidance on the combination, such as mounting, can be found at www.magicmobility.com.au.

2.11 Other available documentation

There are additional Technical Manuals available that may be relevant to you. These include:

- Joysticks and controllers
- Flying with your powerchair.

These documents are available for download via the Magic Mobility website.

2.12 Product safety notices and recalls

Be sure to let us know if you change your address or contact details by emailing us at enquiries@magicmobility.com.au. This will allow us to keep you up to date with information about product safety, use and maintenance.

A notice to the user and/or patient that any serious incident that has occurred in relation to the device should be reported to the manufacturer and the competent authority of the Member State in which the user and/or patient is established.

3

Safety

Using your Magic Mobility product safely depends upon your own good judgement and/or common sense, as well as that of your caregiver, and/or health professional. Magic Mobility is not responsible for injuries and/or damage resulting from any person's failure to follow the warnings, cautions and instructions in this Owner's Manual or any of the documentation supplied with the powerchair.

Attention powerchair users - please do not operate this powerchair without first reading this Owner's Manual. If you don't understand the instructions and warnings, please contact your Magic Mobility agent. Failure to heed warnings may result in injury and/or damage.

While learning to drive and understand the capabilities and how to manage different hazards in your powerchair it's strongly recommended that you always have someone with you. This can be a trained attendant, a family member or care professional who is specially trained in assisting powerchair users in various daily living activities. We always recommend that you carry a mobile phone or GPS alert so that you can reach help if needed.

3.1 General

Before using this powerchair you should be trained in its safe use by your health care professional. Because every powerchair is different it's important that you take time to get to know how the powerchair handles and responds to your controls. Start at slow speeds and increase at the rate you feel comfortable.

3.2 Transfers

To reduce the chance of injury, it's recommended that you have a trained attendant present while you learn to transfer.

All transfers

- Be sure the power is turned off to prevent unexpected powerchair movement
- Make sure motor brakes are engaged and the powerchair is not in freewheel (see Section 4.10)
- Ensure footplates are swung away, flipped up or removed
- Don't stand on footplates when you transfer as it may cause the powerchair to tip
- Make sure your feet do not "hang up" or get caught in the space between the footplates
- Drive straight for a short distance to ensure castor wheels are positioned to avoid tripping
- Ensure armrests do not interfere with transferring
- When transferring, try to avoid putting all your weight on one armrest. This may cause the powerchair to tip and cause injury.

Side transfers

- To side transfer, ensure armrests and legrests are swung away or removed. Position yourself as far back as possible in the powerchair seat to prevent it from tipping forward. Move your chair as close as you can to the seat you are transferring to. If possible, use a transfer board
- Transfer as far back onto the seat surface as you can. This will reduce the risk that you will miss the seat or fall.

3.3 Reaching and leaning

Avoid bending, leaning, or reaching for objects while seated in your powerchair as it affects the centre of balance and could lead to it tipping over. If in doubt, ask for help or use a specially designed pick-up stick. You have leaned too far if your weight shifts sideways or you rise-up off the seat. Don't move forward in your seat; keep your buttocks in contact with the backrest.

- Don't reach with both hands (you may not be able to catch yourself to prevent a fall if you lose balance)
- Don't try to pick up an object from the floor by reaching down between your knees
- Don't reach or lean over the top of the seat back
- Do move your chair as close as you can to the object you wish to reach.

3.4 Dressing

Be aware that your weight will shift if you dress while seated in your powerchair. It is recommended that you have a trained attendant present the first few times you dress. Ensure trailing skirts and scarves cannot get caught in the mechanisms.

3.5 Weight limit

Your powerchair has a maximum weight capacity. This limit is for the combined weight of you and your luggage (see Section 3.6 Bags and Backpacks).

MODEL	MAXIMUM USER WEIGHT No seat elevator or tilt fitted	MAXIMUM USER WEIGHT Seat elevator or tilt fitted
Magic 360 - Class B	160 kg/350 lbs*	160 kg/350 lbs*
Magic 360 - Class C	160 kg/350 lbs*	160 kg * *(seat elevator not available)*
Frontier V6 AT and Urban	182 kg/400 lbs*	160 kg/350 lbs*
Frontier V6 Compact ***(Not sold in the USA/CAN/EU)***	182 kg/400 lbs*	160 kg/350 lbs*
Frontier V4 RWD	182 kg/400 lbs*	160 kg/350 lbs*
Frontier V4 FWD	182 kg/400 lbs*	160 kg/350 lbs*
Extreme X8	182 kg/400 lbs	160 kg/350 lbs
XT2 ***(Not sold in the USA/CAN)***	136 kg/300 lbs	136 kg/300 lbs
XT4	182 kg/400 lbs	160 kg/350 lbs

*** If a Docking System is fitted, the maximum user weight is 136kg**

If the limit is exceeded, damage to your frame, positioning mechanisms or seating may occur potentially resulting in a tip over and injury to the user and/or other persons. Exceeding the weight capacity also voids your warranty.

3.6 Bags and backpacks

Magic Mobility offer bag hooks that enable lightweight loads to be carried on the armrest or the backrest. E.g. a purse and mobile phone on the armrest and a 5kg backpack. The maximum user weight includes the weight of any luggage carried.

The positioning of luggage can affect the stability and performance of your powerchair. Additional care must also be taken when using power positioning to ensure that bags do not get trapped in and damage the powerchair mechanism.

3.7 Non-Magic Mobility parts and third party adaptations

If non-Magic Mobility parts are fitted to the powerchair, Magic Mobility is not responsible for their compatibility, performance or instructions for use. Please refer to the relevant manufacturer manual for appropriate use.

Magic Mobility powerchairs comply with international standards in a standard powerchair configuration. All variants and non-Magic Mobility components are not tested nor approved by Magic Mobility.

Where non-Magic Mobility parts are fitted this is done so at your own risk or risk of the person who assembled the powerchair and could void warranty.

3.8 Trapping hazards

Your powerchair has numerous areas which may be trapping/pinching hazards. Always exercise caution when using your power functions and ensure that body parts, clothing or objects are clear of the mechanisms during operation. Serious personal injury can occur.

3.9 Inadvertent movement

Turn off your power if you will be stationary in your powerchair for an extended time. This will prevent accidental movement through inadvertent joystick contact or by interference from electromagnetic sources (see Section 9). Make sure people who assist you are aware of the joystick and do not touch it. This can cause your powerchair to move unexpectedly. Turn off the power to help conserve your batteries.

3.10 Safety checklist

- Ensure your batteries are fully charged. Red lights on the gauge indicate batteries need to be immediately charged
- Before turning on the power, make sure the joystick springs back to the neutral position
- Don't use your powerchair if the joystick boot is ripped or damaged
- Ensure your powerchair operates smoothly. Unusual noise, vibrations or a change in the ease of use can all indicate an issue. E.g. uneven tyre pressure can cause the powerchair to pull to one side while driving.

3.11 Driving

The speed and direction of the powerchair is generally controlled by the joystick:

- Turn on your powerchair
- Use the joystick to control the speed and direction of travel.

It's important that you develop your own safety practices based on your level of function and ability. Get to know the territories where you plan to use your powerchair, then look for hazards and how to avoid them. Avoid trying a new manoeuvre on your own and remember that it's best to have someone with you.

3.12 Cornering

Excessively high cornering speeds can cause your powerchair to tip over. If you feel that you may tip over when cornering, immediately reduce your speed and decrease the sharpness of the turn.

These tips may help reduce the risk of accidents:

- Reduce cornering speed
- Reduce turn sharpness
- Be aware of uneven, rough and slippery terrain
- Avoid turning on sloped surfaces
- Be aware of changing surfaces - such as passing from a paved area to a gravel area at high speed while turning
- Avoid abrupt directional changes.

3.13 Slopes and ramps

Your powerchair has been designed and tested to allow its use on slopes. Please refer to Section 11. When climbing a slope, always go straight up and try to keep your powerchair moving. However, do not use excessive speed. If you must stop, start up again slowly and then accelerate cautiously. If at any time you feel uncomfortable, reduce your acceleration rate.

When driving down a slope, always go straight down in the direction of the slope. Set your powerchair to the slowest speed setting and drive in a forward direction only. If your powerchair starts to move down the slope faster than you anticipated or desired, reduce the speed with the joystick. Try to keep the powerchair wheels moving slowly to ensure a safe controlled descent.

The following advice is recommended for your safety:

- Don't drive at an angle, up or down the face of the slope or cut the corner of a ramp. Don't turn or change direction. This greatly reduces the possibility of tipping over
- Stay in the middle of the ramp to reduce the risk of dropping a wheel off the side
- Avoid potentially hazardous slopes and areas with reduced traction. E.g. areas covered with snow, ice, mud, cut grass, or wet leaves
- As with all off-road driving, you should always ensure the terrain ahead is clear of unexpected hazards. We advise that you have someone with you who can check ahead
- When exploring alone, proceed with extreme caution. We advise that you always carry your mobile phone or GPS alert so that you can reach help if needed
- Avoid sudden stops and starts
- When on any sort of a slope or decline, never place the powerchair in freewheel mode while seated or standing next to it
- If you attempt a slope that's too steep, don't attempt to turn. If possible, wait for assistance and reverse to low speed. Generally travelling backwards down a slope is not recommended as the powerchair is less stable
- Don't use the seat elevator/lift or drive the chair while elevated on a slope or ramp
- Be aware that stopping distances will increase when travelling down a slope.

3.14 Driving in reverse

Use extra care when driving in reverse. Go slowly as hitting an object unexpectedly could cause you to fall. Stop often and check to ensure that your path is clear of obstacles.

All attendants should be trained in the use of attendant controllers. When an attendant is operating the wheelchair, extra care should be taken when reversing or using in a confined space to avoid injury to the attendant. The attendant should set the speed of the attendant control to a speed that can be comfortably and safely used.

3.15 Street use

Other than crossing streets in designated locations, you should not operate your powerchair on public streets and roadways. This is in accordance with local traffic laws, which vary by country. Please check your local traffic laws and obey all local pedestrian rules.

Be aware that it may be difficult for traffic to see you when seated in your powerchair. Wait until your path is clear of traffic, make eye contact with drivers and then proceed with caution.

3.16 Driving at night

Lighting is designed to improve visibility while driving the chair in low-light or at night. It's also intended to make the chair more visible to others. Be aware that your lights are not always visible to drivers or pedestrians, especially if viewing you from the sides of the chair.

3.17 Driving while elevated

If you have power elevating seating, it's important to heed ALL warnings outlined below. The higher you elevate the less stable the powerchair becomes. This will help you understand how to reduce the risk of tipping over, and how to identify environmental conditions that could affect your safety when driving while elevated (also see Section 4.14).

- Never exceed the weight limit (Section 3.5)
- The lift mode should only be used on flat, level surfaces
- Elevating or driving in lift mode should never be attempted on uneven terrain such as gravel, grass, bumpy surfaces, soft surfaces, uneven footpaths or slopes.

3.18 Motor overheating and damage

Your powerchair has thermal protection to help protect the controller and/or motors from damage due to overheating. However, it is important to understand and avoid driving the wheelchair in a stalled condition for more than a few seconds.

A stalled condition occurs when power is applied to the motors, but the wheelchair does not proceed in that direction. There are two distinct circumstances:

1. **Stall due to being stuck**

   This condition occurs when the motors are powered, but the wheels cannot turn, even with full torque available. For example, if the chair is stuck against an obstacle, in a rut, on a steep slope, or tied down in a vehicle.

   If the chair is not responding correctly to joystick input, stop and assess the situation; do not continue to push the joystick or apply drive power if the chair is not moving in the right direction. Doing so for more than a few seconds can cause the motors to overheat and lead to permanent damage, which is not covered under warranty.

   Use alternative methods such as reversing slightly, changing direction, or seeking assistance to free the chair.

2. **Stall due to Overheating**

   This condition can occur under sustained hill climbing or driving on soft ground. The electronics will decrease the torque to your motors for overheat protection, resulting in a reduction in performance.

   One of these two symbols may be displayed to indicate the control system has overheated.

   When the controller cools, normal torque is resumed.

   When motor torque is reduced, wait for several minutes to allow the system to cool down and the torque will be restored.

The power system may not shut down in time to prevent damage in either of the stall conditions. Prolonged stalling can result in motor burnout due to excessive heat.

3.19 Terrain

Your powerchair is great on firm, even surfaces such as concrete and asphalt. However, depending on the choice of drive wheel, more challenging terrains such as muddy fields, hard sand, gravel, mulch, long grass, kerbs and gutters can all be tackled. Heed all warnings in this manual and be sure to take someone with you while exploring.

3.20 Obstacles, steps and kerbs

Driving over obstacles or kerbs can cause your powerchair to tip over resulting in serious injury. If you have any doubt that you can safely cross a kerb or obstacle, always ask for help. Be aware of your skills and personal limitations. Develop new skills with the help of an assistant. Keep your eyes moving when you drive; scan the area ahead to look for obstacles.

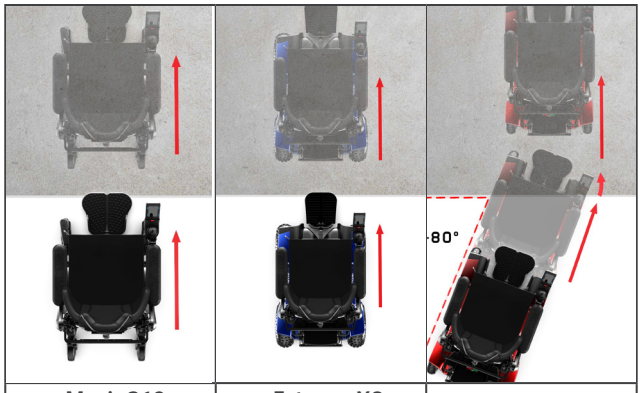

Magic 360, Frontier V6 and V4	Extreme X8 and XT4	XT2

Figure 3.1 Approaching an obstacle

Given the off-road capability of your powerchair, it may be capable of climbing and descending a variety of obstacles, however this can vary greatly depending on the set-up of the powerchair, weight distribution and user's ability.

If your powerchair is fitted with power seating functions, it's a good idea to tilt back or elevate your legrest a few degrees when ascending or descending kerbs or steps to protect your legrest from impacts. Excessive use of power functions in this situation may cause a tip over resulting in injury.

- Proceed with extreme caution when driving near raised surfaces, unprotected ledges, drop-offs, kerbs, porches, stairs, escalators, lifts, etc
- Magic 360, Frontier V6 and V4, Extreme X8 and XT4: Always approach an obstacle so both front wheels touch the obstacle together (Figure 3.1)
- XT2: Approach the obstacle so both wheels touch the obstacke together or on a slight angle (Figure 3.1)
- Don't attempt to ascend any kerb near a drain cover, uneven surfaces or gravel covering
- Avoid travelling backwards down any step, kerb or other obstacle
- Use the ramp or kerb cut out if there is one
- Do not attempt to climb obstacles when the seat is elevated.

3.21 Stairs and escalators

This powerchair is not designed to negotiate stairs. It must never be driven on an escalator (even with an attendant). It's not recommended for use on a moving walkway or travelator. Never climb stairs.

3.22 Environmental conditions

Your powerchair is not designed for use in a heavy rainstorm or in heavy snowy or icy conditions. Contact with water or excessive moisture can cause an electrical malfunction. The frame, motors and other chair parts are not water-tight.

Your powerchair has electric motors and must NEVER be driven through water, into rivers, creeks or the sea. Never take your chair into a shower, tub, pool or sauna. Dry the chair as soon as you can if it gets wet. The joystick hand control unit is NOT WATERPROOF. The joystick module is splash proof but may be permanently damaged if water transgresses the rubber seals (this damage is not covered under warranty). It is a good idea to carry a plastic bag in case of rain. It should be large enough to cover the joystick module and the user's hand while still allowing the joystick to return to centre.

Use extra care if you must operate your powerchair on a wet or slick surface. Stop if one or both main wheels lose traction. If this occurs, you may lose control of your chair or fall. Don't operate your chair on a slope or ramp if there is snow, ice, water or oil film present.

Your powerchair's surface temperature may increase when exposed to heat sources such as sunlight. Personal injury such as skin burns could result from contact with hot surfaces.

3.23 Powerchair lifts

Please refer to Section 5.

3.24 Motor vehicle safety

Please refer to Section 5.

3.25 Drugs and alcohol

Prescribed, over the counter and illicit drugs and alcohol may impair your ability to operate your powerchair in a safe manner. This may result in personal injury or death to yourself and others.

Consult your physician regarding possible impairment from the above. Under no circumstances should you drive your powerchair while your judgement is compromised by drugs or alcohol.

3.26 Alcohol, drugs and smoking

It's strongly recommended that you don't smoke cigarettes while seated in your powerchair and that you stay away from naked flames, open fires and other sources of sparks and high heat. The powerchair has passed the powerchair standards flammability requirements, but it is advisable to keep ashtrays at a safe distance from seat cushions. Please ensure that cigarettes are completely extinguished before disposing and don't leave lit cigarettes unattended.

NOTE: Wear and tear, cleaning products and hair spray may reduce the flame retardation qualities of your upholstery. Please refer to Section 7.11.

4

Operating instructions

Using your Magic Mobility product safely depends upon your own good judgement and/or common sense, as well as that of your caregiver, and/or health professional. Magic Mobility is not responsible for injuries and/or damage resulting from any person's failure to follow the warnings, cautions and instructions in this Owner's Manual or any of the documentation supplied with the powerchair.

4.1 Adjustments

Performance and positioning adjustments to your powerchair should only be made by healthcare professionals, or by persons fully conversant with both this process and the driver's capabilities.

Changing the performance settings could adversely affect your powerchair. Some adjustments may degrade your powerchair's performance and safety by changing its centre of gravity. You may cause injury to yourself and to others. Consult your agent if you notice any change in your ability to control the joystick or your chair or if you find it increasingly difficult to hold your torso upright.

4.2 Armrests

Standard armrests are removable.

Figure 4.1a Standard Armrest

Flexi armrests can flip up out of the way to better allow side transfers.

Figure 4.1b Flexi Armrest

Essential cables may be attached to the armrest, ensure cables are securely reattached and cannot become trapped or pinched.

Don't lift your powerchair by its armrests. They may come loose or break.

4.3 Assignable button controls

It's possible to assign a function to an input control (buttons, jacks) on your powerchair. If controls have been assigned to perform a dual or alternate function, ensure you know what aspect of your chair each control operates. Please contact your agent or Magic Mobility if you do not receive this information. Failure to do so may result in damage and/or injury.

4.4 Batteries

Please refer to Section 6.

4.5 Cushions

Standard foam cushions and other body supports are not designed for specific high-end pressure relief. If you suffer from pressure sores, or are at risk of developing them, you may need a special seating system or device to control your posture. Consult your healthcare professional to see if you need such a device.

4.6 Fasteners

Many of the screws, bolts and nuts on your powerchair are special high-strength fasteners. Use of improper fasteners may cause your chair to fail. Only use fasteners specified by Magic Mobility. If fasteners become loose, tighten them immediately. Over or under tightened fasteners can cause damage to your chair or its components.

4.7 Footplates

If footplates are set too low to the ground, they may "hang up" on obstacles. This may cause the chair to stop suddenly and tip forward. Increased height will be required when negotiating kerbs and obstacles (see Section 3.20).

4.8 Legrests

Centre Mount and Centre Mount Power Elevating Legrest - The footplate can flip up to allow for easier transfers in and out of the wheelchair. The Centre Mount Power Elevating (CMPE) footplates are designed to move independently or optionally as a single or double footplate. Your CMPE footplate is designed to fold away to assist with transfers in and out of the wheelchair.

Figure 4.2a Centre Mount Legrest

Figure 4.2b Centre Mount Power Elevating Legrest

Your powerchair has numerous areas which may be trapping/pinching hazards. Always exercise caution when using your power functions and ensure that body parts, clothing or objects are clear of the mechanisms during operation. Serious personal injury can occur.

Always ensure your feet do not "hang up" or get caught in the space between the footplates, at any time or during transfers.

Swingaway and Power Elevating Swingaway - Press the lever below the hanger to release the legrest allowing it to rotate to the side of the wheelchair. The legrest can be completely removed by lifting the hanger out of the socket. The footplates can be flipped to one side without removing the legrest.

Figure 4.2c Swingaway Legrest showing removal action

Figure 4.2d Swingaway legrest and footplates

4.9 Fold Forward - if fitted

Fold Forward backs have a red release handle. Pull the handle to release the backrest and carefully lower it forwards.

Figure 4.3a Fold Forward grab handle

Figure 4.3b Magic 360 Fold Forward height

Figure 4.3c Frontier V6 and V4 Fold Forward height

Figure 4.3d Extreme X8 Fold Forward height

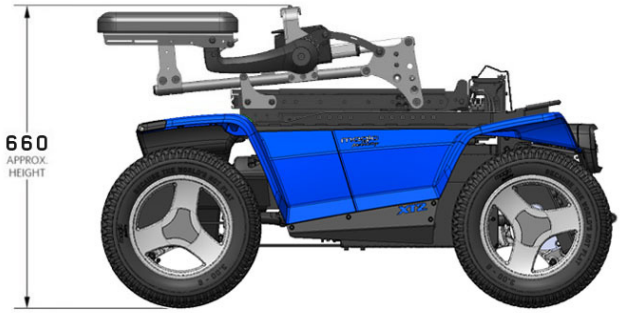

Figure 4.3e XT2 Fold Forward height

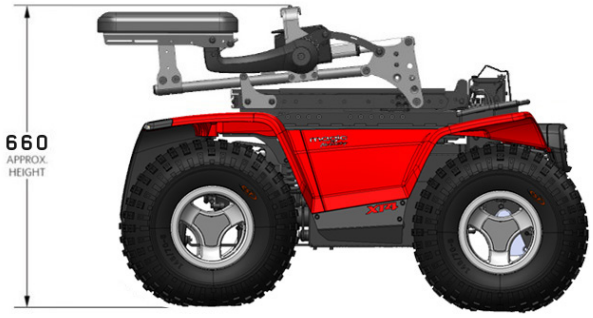

Figure 4.3f XT4 Fold Forward height

4.10 Freewheel mode – pushing the powerchair

There's no braking on your powerchair when it's in freewheel mode. Be sure to turn the power off before disengaging the motor brakes.

Magic 360 – Two motor release levers are located on the rear of the powerchair (see Figures 4.4). To disengage the built-in or "running" brakes simply pull the levers towards you.

Figure 4.4a Magic 360 brake levers engaged

Figure 4.4b Magic 360 brake levers released

Frontier V6 and V4 – Motor release levers are located at the front of each drive wheel (see Figures 4.5). To disengage the built-in or "running" brakes simply push the down levers on each side

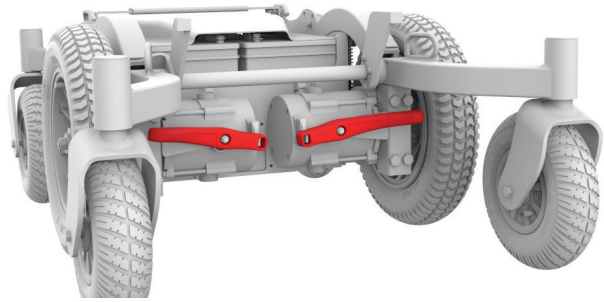

Figure 4.5a Frontier V6 brake levers engaged

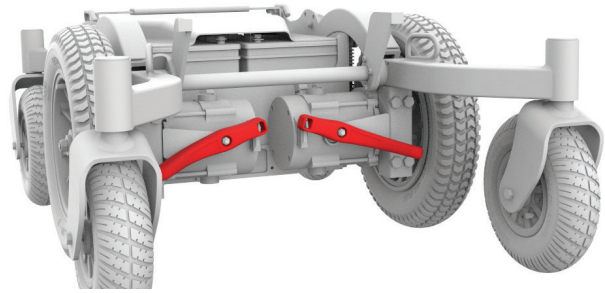

Figure 4.5b Frontier V6 brake levers released

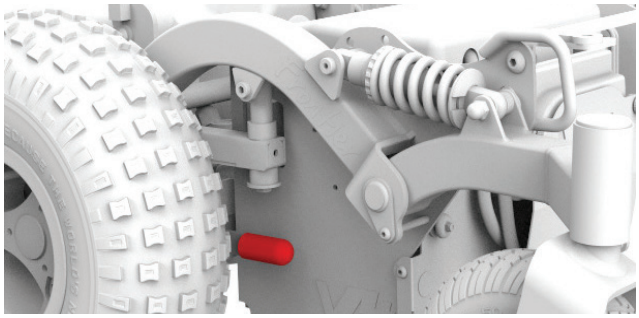

Figure 4.5c Frontier V4 brake levers engaged

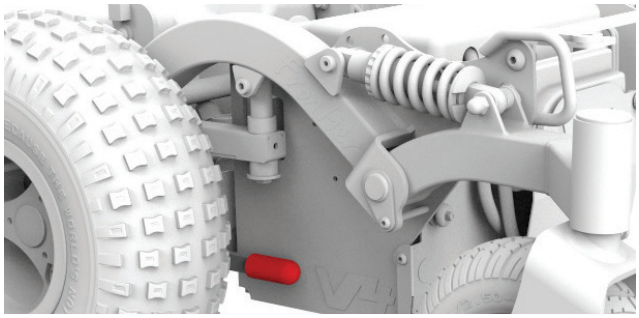

Figure 4.5d Frontier V4 brake levers released

Extreme X8 - Motor release levers are located at the rear of the powerchair (see Figures 4.6).

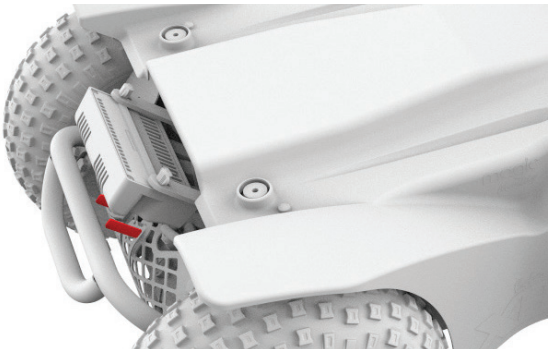

Figure 4.6a Extreme X8 brake levers engaged

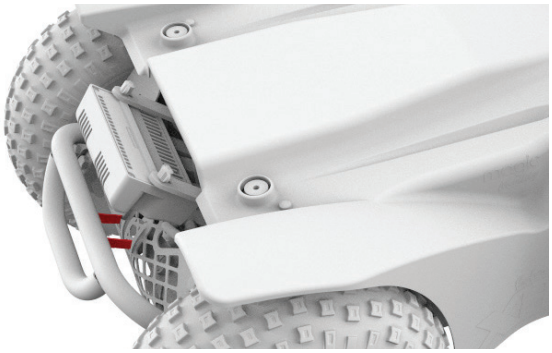

Figure 4.6b Extreme X8 brake levers released

XT2 and XT4 - Motor release levers are located at the rear of the powerchair (see Figures 4.7).

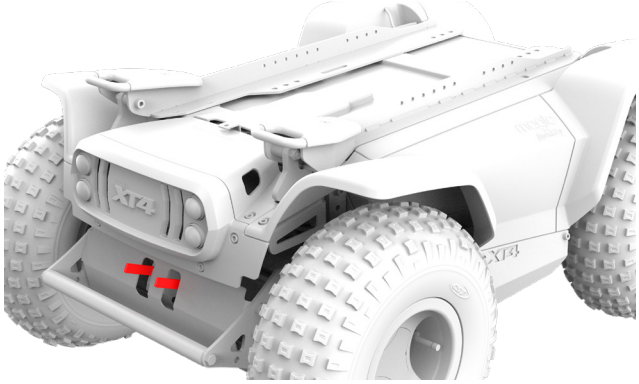

Figure 4.7a XT2 and XT4 brake levers engaged

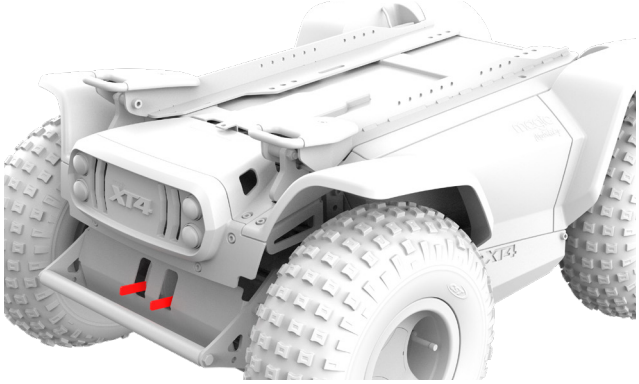

Figure 4.7b XT2 and XT4 brake levers released

If the power is turned on before the brakes are re-engaged the powerchair controls will not function and a "brake error" message will appear when the chair is in freewheel mode. This feature has been intentionally incorporated to protect your safety. These levers are intended for use by the attendant. Push the levers back in again firmly after manually positioning the chair. Turn the power off and on again to remove the error message.

- Don't use your chair in freewheel mode or attempt to place your chair into freewheel mode without an attendant present. Never place your powerchair in freewheel mode while on an incline. The chair could roll uncontrollably on its own, leading to injury to yourself and others
- Never attempt to transfer to or from the powerchair while in freewheel mode. It could roll away from you leading to a fall and injury.

4.11 On/off switch

Don't use the on/off switch to stop the chair in an emergency. To slow your chair to a stop, let go of the joystick and allow it to return to neutral. Faster braking can be achieved by reversing the direction of the joystick.

4.12 Push handles

Don't attempt to tilt your powerchair by pulling down on the push handles. Powerchairs have heavy bases. Attempting to tilt a powerchair to traverse obstacles can damage components in the seating system and/or modular actuators.

4.13 Positioning belts

Please refer to Section 5.

4.14 Power positioning functions

While driving your powerchair in the reclined, elevated or tilted position use caution. Refer to Section 4 Operating Instructions, 3.5 Weight Limit, 3.13 Slopes and Ramps and 3.17 Driving While Elevated.

Your powerchair will be less stable when placed in extreme positions. Read this section carefully and heed the warnings to help reduce the risk of tipping over, premature failure or injury to yourself.

- Don't exceed the weight capacity of your powerchair including luggage
- Don't attempt to operate any power seating options while positioned on an incline, bumpy, soft or uneven surfaces
- Via programming it's possible to reverse the direction of most power seating functions. Ensure that you know which direction your seat will move before operating
- Don't put the power powerchair into freewheel mode with the seat elevated
- Maintain recommended tyre pressure for optimum stability.

Please stay clear of any power actuator while the component is in motion. Magic Mobility power seating can move the seat through many positions. Users should be aware of their surroundings and ensure there is ample space available to perform the desired functions. Ensure your body and clothes are clear of power seating components as this may result in pinch points before operating them. Serious personal injury will occur if you or someone else becomes trapped in the mechanism. Don't attempt to operate the lift or tilt power seating options around children.

Latched mode

While operating any power seating function in latched mode use caution. In latched mode, power seating will not stop until a reverse command is performed or driving has stopped.

To operate a power function from the joystick:

- Whenever possible bring your powerchair to a complete stop on a flat surface
- Push the 'mode' button on the joystick. Select the required function by moving the joystick left or right. Once the function option is highlighted, move the joystick forward or backwards to operate the function
- Once the seat reaches the end of its movement release the joystick
- Before driving, return the seat to its lowest upright position
- The power seat elevator is fitted with a system that reduces the speed of the powerchair when the seat has been elevated approximately 50mm.

4.15 Seating

Non-approved Magic Mobility seating systems may affect or interfere with other parts of the chair. Don't change your chair's seating system and never raise your seating more than the 50mm of adjustment that is built into the mounts without consulting your Magic Mobility agent first. The powerchair stability will be adversely affected and could tip over and cause serious injury.

4.16 Shock absorber springs (Magic 360 only)

The four shock absorber springs are set to factory default at time of manufacture. These springs can be adjusted for improved chair performance depending on user weight. Only the shock absorber springs are adjustable. The rest of the suspension linkages should remain as supplied.

The amount of preload required on the shocks mainly depends on user weight and their positioning on the seat. Refer to the table on the below for approximate values based on user weight. Small protruding 'pips' are moulded into the front and rear side plastic covers and the leading and trailing arms. If these 'pips' line up when the user is seated, then the shock preload should be appropriate (see Figure 4.8).

SHOCK PRELOAD GUIDELINES	
USER WEIGHT	PRELOAD ON SHOCKS
Up to 90kg	1mm
91 to 125kg	2mm
126 to 160kg	3mm

Insufficient shock preload may affect chair stability.

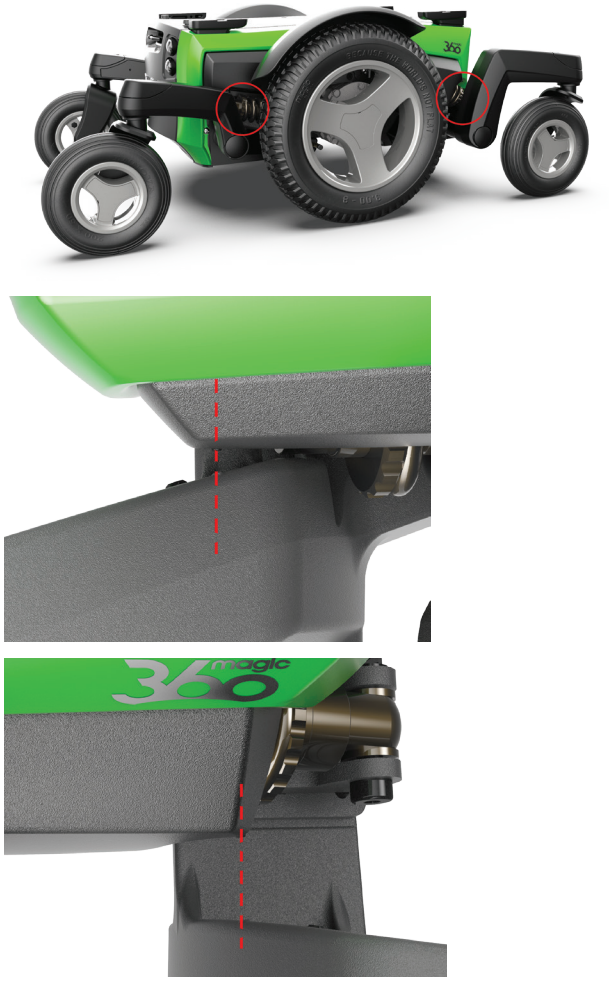

Figure 4.8 – Shock absorber adjustment

4.17 Slope sensor (inclinometer) – if fitted

The slope sensor option enables the chair to be aware of its backrest angle relative to the horizon. This includes the accumulation of backrest recline, seating tilt and ground incline put together. The slope sensor uses this information to minimise the chance of the chair becoming unstable due to body weight being too far back.

Backrest angle inhibits

The inhibits for the backrest angles are as follows:

	BACKREST ANGLE	RESULTING INHIBIT
	0° - 30°	None
	31° - 50°	Lift
	> 51°	Lift up Tilt back Recline back Drive

Seat raise inhibits

A further inhibit may activate depending upon the seat lift height. When the seat is lifted above a certain height the LCD joystick module will display an orange turtle. If you have a LED joystick module its speed indicator lights will flash. These indicate the following inhibits because of the seat elevation:

- Speed
- Tilt back
- Recline back
- Troubleshooting.

If your chair has a slope sensor and a function does not seem to be operating do the following:

- Drive the lift function downwards until it stops in the home position
- Drive the tilt function forward until it stops in the home position
- Drive the recline function forward until it stops in the home position
- If your chair is still inhibited please refer to Section 8 Common Troubleshooting.

4.18 Steering lock option – if fitted (Extreme X8 only)

The steering lock provides greater straight-line directional stability. This is particularly useful when reversing your powerchair down a vehicle ramp. The steering lock is activated via your joystick and the action is achieved by locking the steering tie-rod.

- When the steering lock is engaged, only drive the powerchair forwards and backwards
- Attempting to drive the powerchair normally with the steering lock engaged could cause serious damage
- Before driving normally, ensure that you have disengaged the steering lock with the joystick.

4.19 Transfer tilt - if fitted

The transfer tilt option allows the seat front to be lowered by up to 70mm to improve the ease of transferring in and out of the power powerchair. The powerchair driving functionality is inhibited while the chair is tilted forward to prevent damage to the legrests and footplates which could occur with the seat in this position.

- As the seat tilts forward an orange turtle appears. The powerchair will still drive slowly
- Once the seat reaches its lowest position the action will stop and the powerchair is inhibited from driving. A red turtle will flash
- Always ensure that the mechanism has returned the seat back so that the orange turtle flashes, or no turtle appears (horizontal) otherwise the powerchair will not drive.

4.20 Tyres

Please refer to Section 7.

4.21 Upholstery

Please refer to Section 7.11.

4.22 Wiring and connectors

Never pull on cables directly. This can result in wires breaking inside the connector or harness. To remove a plug or connector, always grasp the plug or connector itself and ensure any clips or latches are released before pulling.

4.23 Kneepads

Both centre fixed and centre power elevating legrests utilise kneepads that can be removed using the hand knob.

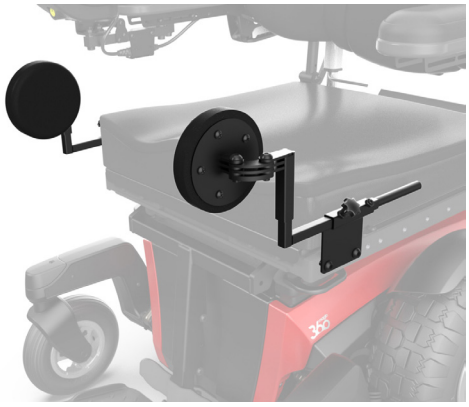

Figure 4.9a Kneepads on Centre Mounted Legrest

Swingaway legrest utilise kneepads that are removed when the entire legrest is lifted out.

Figure 4.9b Kneepads on Swingaway legrest

4.24 Lateral supports

MPS Lateral supports can be fixed or swingaway.

Figure 4.10a Fixed and Swingaway Lateral supports on MPS backrest

Magic Rehab backs have built in lateral supports.

Figure 4.10b Built in Lateral supports on Rehab backrest

4.25 One Click Activator - if fitted

The One Click Activator is available with the CJSM and CJSM2 joystick. It enables you to directly operate up to six actuator-based power functions, each with one simple click. Combined with a CJSM2 joystick, it has the added benefit of enabling you to change your power functions on-the-go, without stopping your wheelchair.

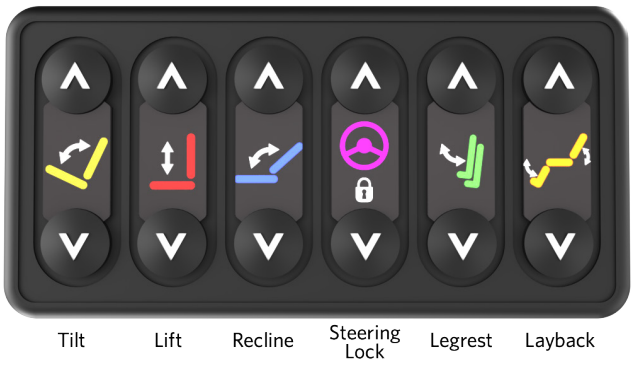

Figure 4.11 A typical set-up of the One Click Activator

The buttons of the One Click Activator can be programmed for an individual's requirements, depending on the configuration of your powerchair.

The One Click Activator is NOT waterproof.

Positioning belts, tie downs and transportation

5.1 Powerchair transportation in vehicles (as cargo)

Always be sure your powerchair and its components are properly secured during transportation. In particular, the joystick controller should be well protected. Please contact your Magic Mobility agent for advice regarding transporting your powerchair.

The powerchair must only be transported in a vehicle that is approved for such purpose. Check that the powerchair is secured, the motor brakes engaged and power is turned off. The powerchair must be secured by fastening straps through the front and rear brackets. Secure the powerchair according to the vehicle restraint manufacturer's instructions. Ensure any detachable parts are secured or packed and labelled so they do not get lost.

5.2 Powerchair transportation in aeroplanes (as cargo)

Gel cell batteries are Federal Aviation Administration (FAA) approved, allowing safe transportation on aircraft, buses and trains. However, Magic Mobility recommends that you always check in advance with the carrier as there may be additional requirements. When flying with your powerchair, always contact the airline to understand the specific information that they need. Refer to our website to read Magic Mobility's Flying with your Powerchair fact sheet.

5.3 Using your powerchair in trains

Train operators will be able to supply details of any special requirements/instructions. We advise you to check the following:

- Are there suitable and intended areas in the train for powerchair users?
- Are there suitable or designated areas on the platform for powerchair users to easily board the train?
- Will the combined mass of the powerchair and its occupant be able to board the train?
- Make sure the boarding access slope is not greater than the dynamic safe slope (see Section 3.13)
- Any obstacles or thresholds should not exceed the maximum kerb climbing capability of your powerchair (see Section 3.20).

5.4 Powerchair lifts and hoists

Turn off your chair's power when you are on a lift. If you fail to do so, you may touch the joystick by accident and cause your chair to drive off the platform. Be aware that a "roll-stop" at the end of the platform may not prevent this.

Make sure there is not a lip or drop-off at the top or bottom of the platform. These may cause a fall or tip over if a castor gets "hung up". In these circumstances you need to backup, reposition the castor for a more direct approach and slowly try again. When in doubt always ask for help.

If it's necessary to use a transportation product such as a vehicle hoist or lift, Magic Mobility recommends that the manufacturer's instructions and specifications are closely reviewed before using the product.

5.5 Lifting your powerchair

Magic 360, Frontier V6 and V4: The tie down rings can be used to lift your powerchair without the occupant. Tie down rings are highlighted in red in Figures 5.2. It's critical to ensure the lifting straps are run inboard of the armrests and clear of any other parts that may be excessively loaded when the powerchair is lifted. The ideal strap location is shown in Figure 5.1.

Extreme X8, XT2 and XT4: The tie down rings CAN'T be used to lift the powerchair as damage may occur to your powered seating. A lifting ring kit is available separately as shown in figures 5.2d-f.

Use caution when lifting your powerchair. Always proceed slowly and ensure the chair is balanced. Do not route the lifting straps over sharp edges or accessory brackets.

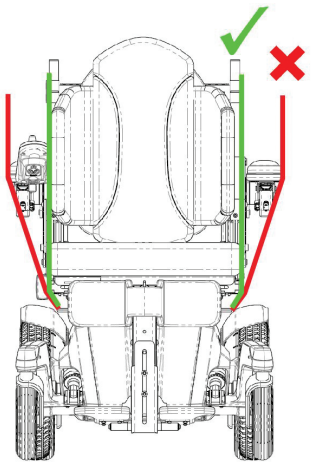

Figure 5.1 Routing the lifting straps

Figure 5.2a Magic 360 lifting points

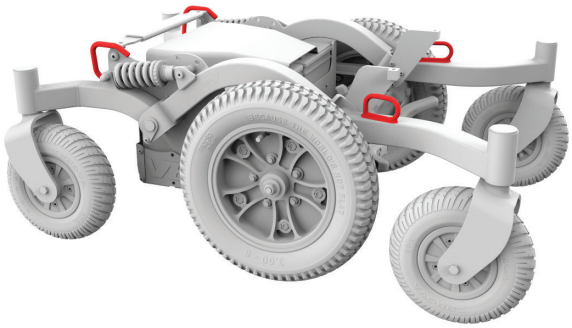

Figure 5.2b Frontier V6 lifting points

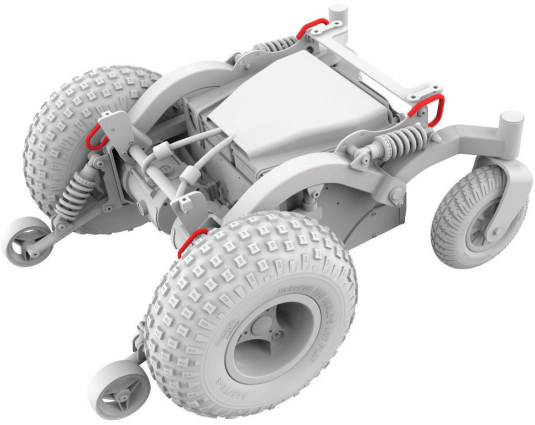

Figure 5.2c Frontier V4 lifting points

Figure 5.2d Extreme X8 lifting points (sold separately)

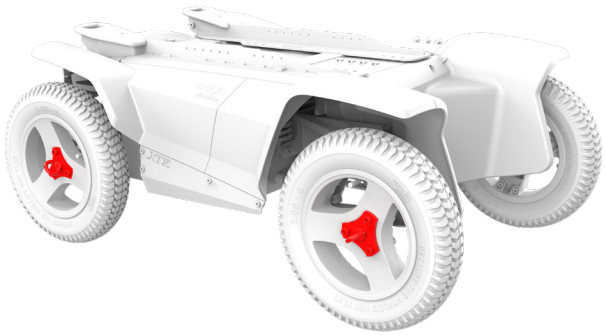

Figure 5.2e XT2 lifting points (sold separately)

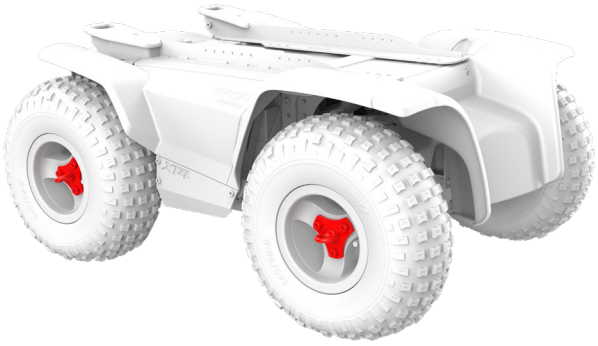

Figure 5.2f XT4 lifting points (sold separately)

5.6 Positioning belts and harnesses

It's the purchaser, therapist and healthcare professionals obligation to determine if a positioning belt is required to ensure user's safe operation of the powerchair. Positioning belts can be ordered through your Magic Mobility agent.

Positioning belts are predominately used to support posture. They can also help limit slipping and/or sliding when the chair is in motion. The positioning belt is not a transit rated safety belt and should not be used in place of a seat belt during motor vehicle transportation.

Improper use of positioning belts may cause severe injury or death. If you use a positioning belt be sure to follow the recommendations in this section:

- Make sure the user doesn't slide down the powerchair seat. If this occurs the user may suffer chest compression or suffocate due to the belt pressure

- Belts must be snug, but not be so tight that they interfere with breathing. You should be able to slide your open hand, flat, between the belt and the user

- A pelvic wedge or a similar device can help keep the user safe from sliding down the seat
- Make sure the user can easily remove the belts in an emergency.

Don't use positioning belts as:

- A patient restraint or on a user who is comatose or agitated

- A motor vehicle restraint. In an accident or sudden stop, the user may be thrown from the chair. Powerchair positioning belts will not prevent this and further injury may result from the belts or straps.

5.7 Travelling in a vehicle while seated in your powerchair

Magic Mobility powerchairs comply with the requirements of ISO 7176-19 and, as such have been designed and tested for use only as a forward facing seat in motor vehicles. The powerchair has not been tested in other positions.

Testing has been conducted with a representative four-point strap system (two at the front and two at the rear). Use only with powerchair tie down and occupant restraint systems suitable for the powerchair weight including options that have been installed in accordance with the manufacturer's instructions. The restraint system must conform to SAE J2249 (USA) or ISO 10542 (International).

Powerchairs secured in a vehicle don't provide the same safety and security as vehicle seating. Magic Mobility recommends that users transfer to the vehicle seat and use the vehicle-installed restraint system whenever possible. The unoccupied powerchair should then be stored as cargo or secured in the vehicle as described in Section 5.1.

When seat positioning options are fitted the following should be followed whenever feasible:

Seat elevator - fully DOWN with the seat at its lowest level

Seat tilt - fully DOWN with the seat parallel to the ground

Legrest - fully DOWN with feet close to the floor and knees bent to 90°

Backrest - upright, at or as close to 90° to the seat.

Strap restraint system

- The powerchair can only be secured by using the tie-down points on the powerchair's frame (see Figure 5.4)
- The tie-down points (two at the front, two at the back) are indicated by the transit symbol (see Figure 5.3). Fit the front straps first, then the rear. Tighten the straps to secure the powerchair. The powerchair may not be secured by any other components
- Due to the high loading that can occur during a severe crash, Magic Mobility recommends fitting two straps on each rear tie-down point
- No changes or replacements should be made to the tie-down points.

Figure 5.3 transit symbol

Figure 5.4a Magic 360 tie downs

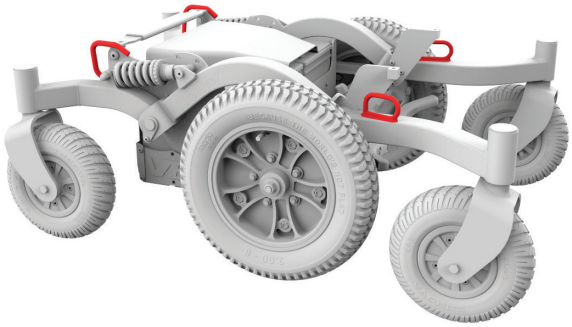

Figure 5.4b Frontier V6 tie downs

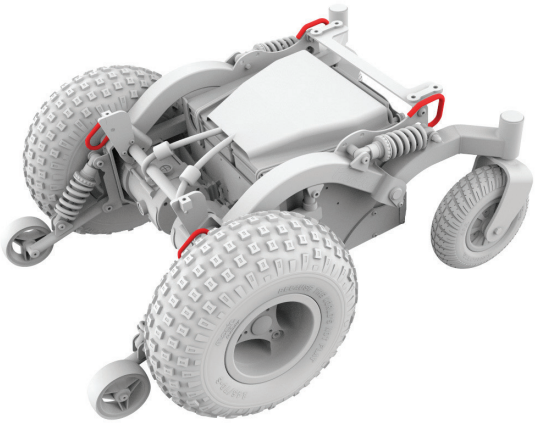

Figure 5.4c Frontier V4 tie downs

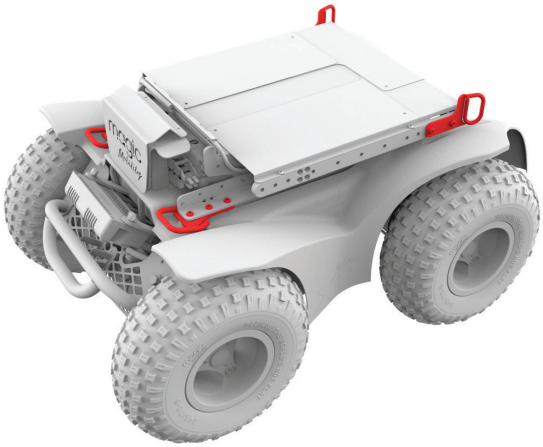

Figure 5.4d Extreme X8 tie downs

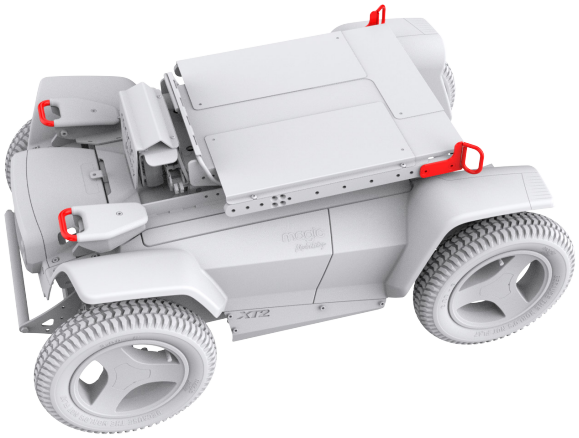

Figure 5.4e XT2 tie downs

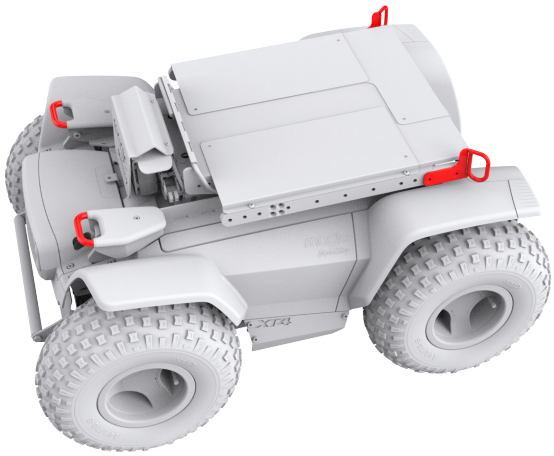

Figure 5.4f XT4 tie downs

Occupant restraint instructions

- Powerchair mounted lap belts or lap straps (postural or otherwise) should not be used as or relied upon for occupant restraint in a moving vehicle
- **Always use a three-point occupant restraint system to secure the occupant**
- Both pelvic and upper torso restraint belts must be used to restrain the occupant and to reduce the possibility of head and chest impacts with the vehicle components
- Restraints should be mounted to the appropriate vehicle pillar and should not be held away from the body by powerchair components such as armrest or wheels (Figure 5.6)
- Use a suitable positioned headrest when being transported in a powerchair.

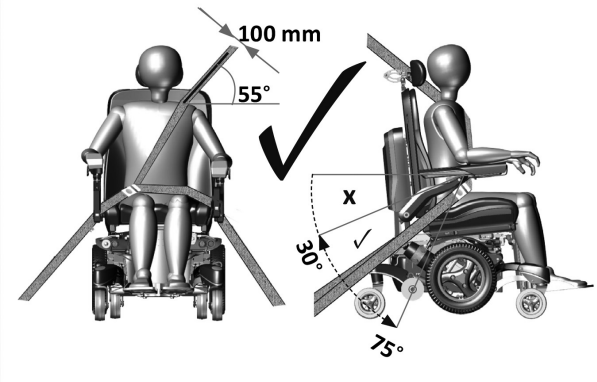

Figure 5.5 – correct positioning of three-point occupant restraint

Positioning the occupant restraint

- A pelvic belt should be worn low across the front of the pelvis so that the pelvic belt restraint angle is between 30° - 75° relative to the horizontal (Figure 5.5)
- A steeper (greater) angle within the preferred zone is desirable (Figure 5.5)
- The upper torso restraint belt must fit over the shoulder and across the chest as illustrated (Figure 5.5). Do not fit restraint belt as shown in Figure 5.6
- Belt restraints should be adjusted as tightly as possible, consistent with user comfort
- Belt restraints should not be twisted when in use.

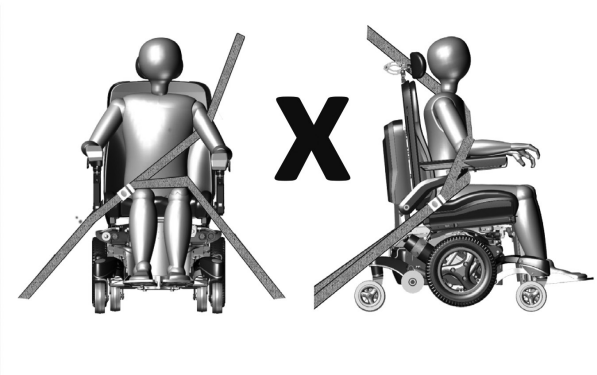

Figure 5.6 – incorrect positioning of three-point occupant restraint

Tests were conducted with a 102 kg or 76 kg crash test dummy (see section 11). Occupants with a higher weight are at increased risk during an accident.

Magic Mobility recognises that it is not always practical for users to be transferred. In this circumstance, where the user must be transported while in the powerchair, the following advice must be followed:

- User safety during transportation depends upon the diligence of the person securing the tie down restraints. They should have received appropriate instructions and/or training in their use
- Attach occupant restraints according to manufacturer's instructions and SAE J2249
- Don't use WTORS designed to rely on the powerchair structure to transfer occupant restraint loads to the vehicle
- Magic Mobility powerchairs comply with the requirements of ISO 7176-19 and, as such, have been designed and tested for use only as a forward-facing seat in a motor vehicle
- **Note** - compliance to this standard does not preclude using the powerchair rearward in large accessible vehicles equipped with rear facing passenger stations
- The powerchair has been dynamically tested in a forward-facing orientation with the crash test dummy restrained by both pelvic and shoulder belts (e.g. a shoulder belt as part of a three-point belt restraint)
- Both pelvic and shoulder belt restraints should be used to reduce the possibility of head and chest impacts with vehicle components
- To reduce the potential of injury to vehicle occupants, powerchair mounted trays not specifically designed for crash safety should: i) be removed and secured separately in the vehicle, or ii) be secured to the powerchair but positioned away from the occupant with energy absorbing padding placed between the tray and the occupant
- When possible, other auxiliary powerchair equipment should either be secured to the powerchair or removed and secured in the vehicle during travel. This will ensure that it doesn't break free and cause injury to vehicle occupants in the event of a collision
- An occupant restraint suitable for transportation (see label on headrest) must be fitted and suitably positioned at all times during transportation
- Postural supports, lap straps and lap belts should not be used or relied on for occupant restraint in a moving vehicle unless they are labelled as meeting the requirements specified in ISO 7176-19 or SAE J2249
- The powerchair should be inspected by a manufacturer's representative before reuse following involvement in any type of vehicle collision
- Alterations or substitutions should not be made to the powerchair securement points or to structural and frame parts or components without consulting the powerchair manufacturer
- Spill proof sealed batteries such as "gelled electrolyte" should be installed on powerchairs when used in a motor vehicle
- Care should be taken when fixing the occupant restraint to position the seat buckle. This will ensure that the release button is not contacted by powerchair components during a crash.

5.8 Retractable docking pin – if fitted

The Magic 360 and Frontier V6 and V4 have an optional crash tested retractable docking pin (see Figures 5.7). The retractable docking pin is fitted to the powerchair base and is operated via the joystick. When the docking pin is extended, the speed of the powerchair is reduced to 1.2 kph and the orange turtle icons will display on the joystick.

The maximum user weight limit for powerchairs fitted with a docking pin is 136kg.

5.9 Dahl docking system – if fitted

The DAHL Docking MK. II and the DAHL VarioDock systems have been tested with the Magic 360 and comply with ISO 7176-19.

For safe installation and use of the lock plate, please refer to our **Dahl docking system User Guide**. Please refer to the same guide for maximum user weight.

The maximum user weight limit for the Magic 360 fitted with the Dahl docking system is 136kg.

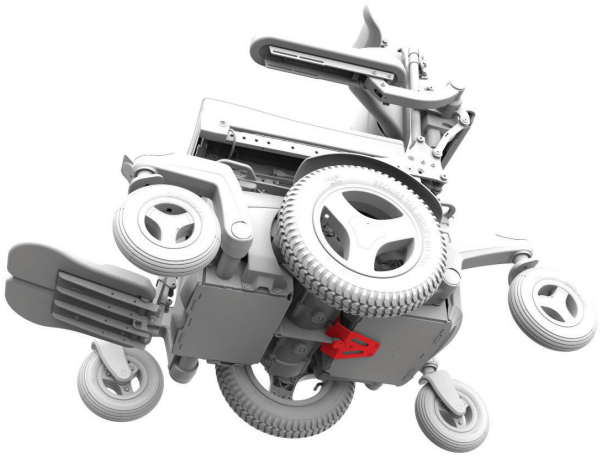

Figure 5.7a Magic 360 docking pin - retracted

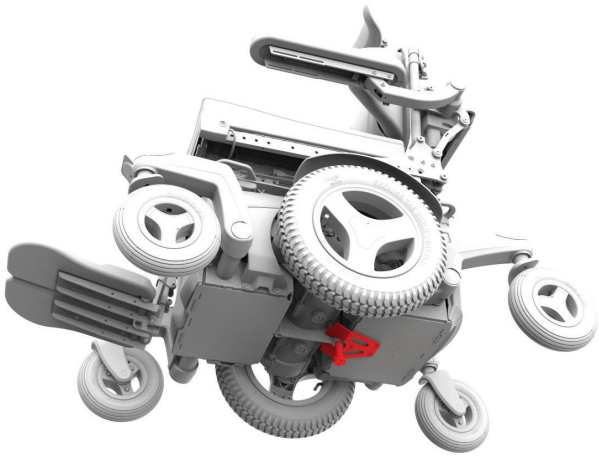

Figure 5.7b Magic 360 docking pin - extended

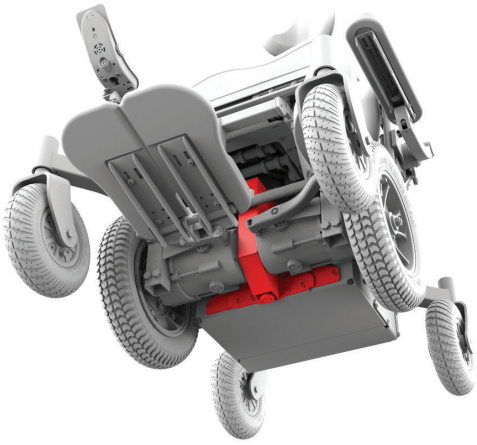

Figure 5.7c Frontier docking pin - retracted

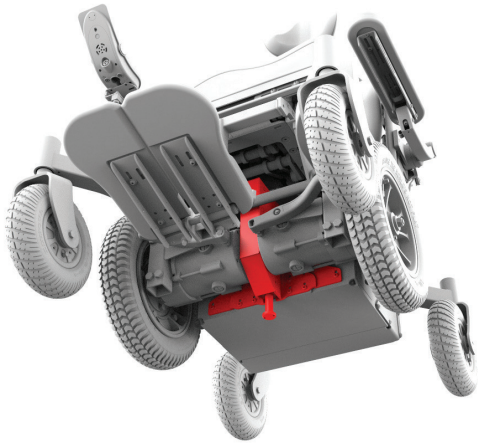

Figure 5.7d Frontier docking pin - extended

After a vehicle collision

If you have been involved in a vehicle collision, it's important that a Magic Mobility authorised agent inspects your powerchair before you use it again. If the damage is questionable or there is concern about its condition, then Magic Mobility recommends that the chair is replaced.

Attention powerchair users – your powerchair warranty is void if it's been involved in a collision.

Batteries and charging

6.1 Electrical safety protection

Your powerchair has a fuse fitted to the battery circuit which provides a level of protection to the battery and its wiring in the event of a short circuit. When a fuse blows your chair will not drive and you will need to contact your Magic Mobility agent for repair and/or replacement.

6.2 Batteries

Your powerchair has two high quality, long lasting batteries that are sealed (non-spillable) and maintenance free. Your powerchair has a 24V system which is supplied by two 12V batteries (see Figures 6.1). There is no need to check its electrolyte fluid level. Despite being like automotive batteries, powerchair batteries are not the same. Automotive batteries are not designed to handle a long, deep discharge, and are not suitable for use in powerchairs.

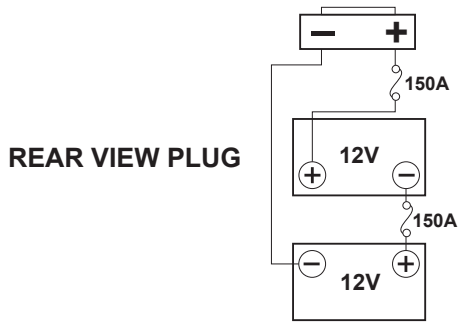

Figure 6.1a - Battery wiring Magic 360

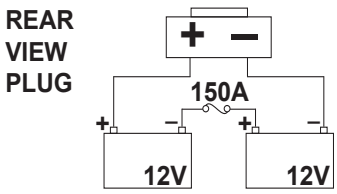

Figure 6.1b - Battery wiring Frontier V4, V6 and Extreme X8

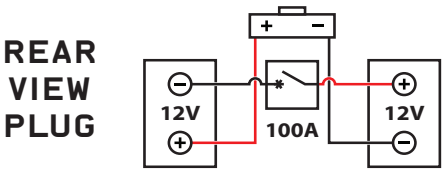

Figure 6.1c - Battery wiring XT2 and XT4

- Batteries have a finite life and limits on the length they supply and store energy. You can only charge batteries a certain number of times before they will fail and no longer hold charge
- Do not mix and match battery manufacturers or technology. Never mix gel cell batteries with AGM batteries. Only use identical batteries that have been manufactured at the same time and that are in the same state of charge. Batteries must always be replaced as a pair
- Battery posts, terminals and related accessories contain lead and lead compounds, wash your hands after touching
- Batteries contain corrosive chemicals. Use only AGM or gel cell batteries to reduce the risk of leakage or explosive conditions
- When fitting batteries, ensure their terminal posts cannot touch any part of the powerchair frame during installation. Battery terminals are covered which prevents them contacting the frame during normal operation or a tip over
- Never connect a life support or auxiliary device to a powerchair battery without a backup system. The electrical system may fail and result in severe injury or death to the user.

6.3 Battery charger

Please read the owner's manual with the charger supplied carefully. Familiarise yourself with the indicator lights so you understand when the full charge is achieved. The general procedures and effects for the interference with the chair and the batteries remain valid.

6.4 Battery care plan

Below is set out a battery care plan for maintenance-free batteries. This has been agreed between Sunrise Medical and the battery manufacturers, to enable you to get the best out of your batteries. If a different care plan is followed, this may result in lower than expected performance from your powerchair.

- Only use an approved Sunrise Medical charger compatible with the vehicle to be charged
- Charge your batteries every night, regardless of use. Don't leave batteries at low charge for an extended period

- Charge the batteries in a well ventilated area
- Do not interrupt the charging cycle; wait until the battery charger lights indicate that charging is completed. *(Refer to the battery charger manual)*
- If your powerchair is not being used, it should remain connected to the charger until required. This will not damage your batteries, as long as the mains socket/plug is left switched on. Turning the mains socket/plug off, but leaving the mains cable plugged in, will eventually deplete your battery charge
- If you leave your powerchair for an extended period (more than 15 days), charge the batteries fully and then disconnect the main battery lead

- Failure to allow for full recharge will damage the batteries and can lead to shortened distances and premature failure
- As a general rule, maintenance-free batteries take longer to fully charge than "wet" lead-acid batteries
- Avoid ultra-deep discharges (deep discharges reduce battery life)
- The battery terminals need to be checked regularly for signs of corrosion. If any corrosion is apparent, thoroughly clean the terminals and re-grease them with Vaseline petroleum jelly, not ordinary grease. Ensure that the terminal nut and bolt, cable clip and exposed cable are completely covered with jelly
- Following all the points above should result in a healthier battery, greater range for the powerchair user and a longer life for your batteries.

6.5 Connecting the battery charger

Procedure for connecting the charger and charging:

- Switch off the wheelchair controller
- Connect the battery charger round output plug to the charging socket on the front of the joystick module (see Figure 6.2)

Figure 6.2 - Charging socket

- Connect the charger to the mains supply by means of the mains plug, and switch on.

For more information about the charger operation, consult the instructions provided with the charger.

Depending on how depleted the batteries are, it may take **over** 12 hours to fully charge the batteries again.

DANGER!

- Make sure the cord is located so that it will not be stepped on, tripped over or otherwise subjected to damage or stress
- Do not rest a battery on top of the charger
- Do not stand the charger on a carpet or other soft surface. Always place it on a hard, flat surface
- Do not operate the charger if it has received a sharp blow, been dropped or otherwise damaged in any way. Take it to a qualified technician
- Never place the charger directly above the battery being charged; gases from the battery will corrode and damage the charger
- Never charge a frozen battery. A fully charged battery will rarely freeze, but the electrolyte of a discharged battery can freeze at -9°C. Any battery that is suspected of being frozen should be thawed completely before charging
- Never sit with the charger on your lap when charging your batteries
- The charger casing will get hot during its normal operation
- Do not disassemble charger; only have it repaired by the manufacturer. Incorrect re-assembly may result in a risk of electric shock or fire
- To reduce the risk of an electric shock, unplug the charger from the outlet before attempting any maintenance or cleaning. Turning off the controls will not reduce the risk
- Never smoke or allow a spark or flame in the vicinity of battery or charger
- You should not charge your batteries in outdoor conditions
- It is advised to use a smoke detector in the charging area.

6.6 Achieving maximum range from your batteries

- Ensure that your batteries are fully charged prior to using your powerchair
- Ensure your tyre pressure is correct for the weight and the terrain that you plan to travel
- Try to maintain a constant speed and drive as smoothly as possible
- Try to avoid inclines
- Limit the amount of baggage weight you carry.

6.7 Fully discharged batteries

- Never allow batteries to completely discharge. Driving your powerchair until it has almost stopped will greatly reduce the life of your batteries
- Don't operate the control system if batteries are nearly discharged. Failure to comply with this condition may leave users stranded in an unsafe position, such as in the middle of a road
- Never leave batteries in a discharged condition. Fully charge unused or stored batteries least once a month
- The charger will not operate once batteries have been discharged to an extremely low voltage. If this happens, call your Magic Mobility agent for assistance.

LCD SCREEN BATTERY GAUGE	
	Batteries are charged if the battery gauge displays red, yellow and green.
	If possible, charge batteries once the battery gauge displays only red and yellow.
	Charge batteries as soon as you can after the battery gauge displays only red: either steady or flashing slowly.

LED BATTERY GAUGE		
	(LEDs 1 – 10)	Batteries are charged when the battery gauge displays red, yellow and green.
	(LEDs 1 – 7)	If it is possible, charge batteries once the battery gauge displays only red and yellow.
	(LEDs 1 – 3)	Charge batteries as soon as you can after the battery gauge displays only red: either steady or flashing slowly.

Figure 6.3 LCD and LED battery gauge charging guide

6.8 Battery gauge

Use the tables (Figure 6.3) as a charging guide. Your battery gauge may also flash different patterns to indicate the battery status:

- LED on, steady - indicates that all is well and displays level of charge remaining
- LED flashing slowly - the control system is functioning correctly but needs charging
- LED lights up sequentially, stepping up - powerchair batteries are charging. You will not be able to drive the powerchair until the charger is disconnected and you have switched the control system off and on again.

6.9 How your battery gauge works

The battery gauge lets you know how much charge is left in your batteries. The best way for you to use the gauge is to learn how it behaves as you drive the powerchair. Like the fuel gauge in a car, it's not completely accurate, but will help you avoid running out of energy.

When the control system is switched on, the battery gauge shows an estimate of remaining battery charge.

Battery charge levels depend on how you use your powerchair, the battery temperature and age. These factors will affect the distance you can travel in your powerchair. All powerchair batteries will gradually lose capacity as they age.

If your battery gauge reading seems to fall more quickly than usual, your batteries may be worn out. When replacing worn out batteries always fit the type recommended by Magic Mobility. If another type of battery is used the battery gauge may be inaccurate.

6.10 Replacing batteries

Always have your batteries replaced or installed by a trained powerchair technician.

6.11 Battery disposal and recycling

Batteries are deemed hazardous waste. At the end of battery life, contact your local recycling authority or a Magic Mobility agent for instructions on disposal. Your Magic Mobility agent will also have information on recycling other powerchair parts, which is highly recommended when parts are replaced.

6.12 Battery isolation (XT2 and XT4 only)

XT models feature a battery isolation switch, operated by a lever at the rear of the wheelchair.

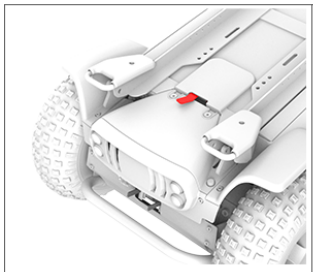	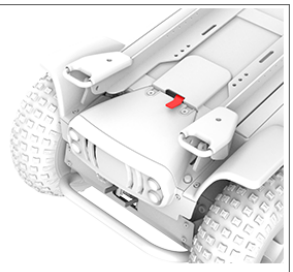
LEVER ← LEFT	LEVER → RIGHT
BATTERIES ISOLATED	BATTERIES CONNECTED

Care and maintenance

Like any motorised vehicle, your powerchair requires routine maintenance checks. You can perform some of these checks yourself, but it's recommended that your chair be inspected at a factory authorised service facility. Repairs or replacements, including batteries and tyres, should only be done using manufacturer-approved components to ensure optimal performance (see Section 7.20). With the right care, your powerchair should give you many years of operation.

Note: Black tyres may leave marks on your floors. If your powerchair is parked in your home, you may wish to park it on top of a mat.

7.1 Tyre pressure

Under inflated tyres can leave them prone to puncture and decrease your powerchair's range. Over inflated tyres can also be dangerous and cause tyres to explode which may result in injury. The maximum recommended tyre pressure is also recorded on the sidewall of the tyre, however Magic Mobility's recommended maximum pressure is shown in the chart below. Uneven tyre pressure can cause your powerchair to veer to one side.

Tyre pressure should be checked weekly. All pneumatic tyres are fitted with automotive type valves and can be inflated using most typical automotive hand and foot pumps. Never use service station air outlets. Failure to use the correct inflation pressure can result in reduced performance or negatively impact your safety.

Lower drive wheel tyre pressure will provide greater traction in mud and on looser surfaces such as gravel. When driving on firmer surfaces, off-road tyre pressure may be increased according to the charts below and depending upon user weight, preferences and driving capability.

7.2 Magic 360 and XT4 off-road drive wheels

Tyre Description	OFF-ROAD GUIDANCE CHART Magic Mobility Recommended Optimum Operating Pressures	Maximum Pressure According to Tyre Capacity 24 psi 165 kPa
145/70-6 	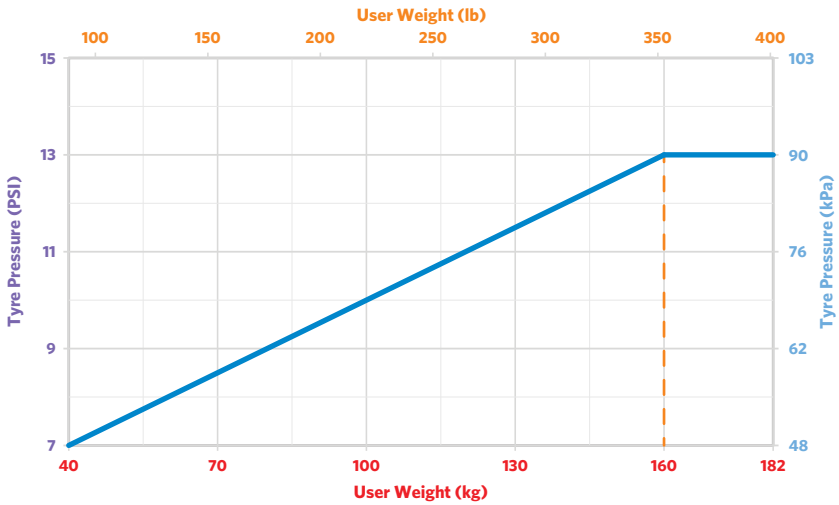	**Magic Mobility Recommended Optimum Operating Pressure for On-Road** 13 psi 90 kPa 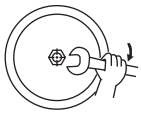 47-50 Nm

7.3 Magic 360 and Frontier V6/V4 crossover drive wheels

Tyre Description	Magic Mobility Recommended Optimum Operating Pressures	Maximum Pressure According to Tyre Capacity
5.30/4.50-6	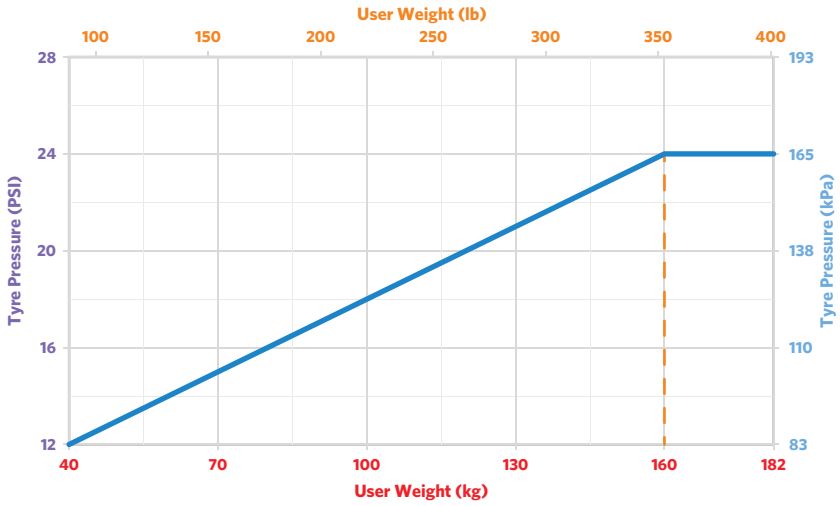	38 psi 262 kPa 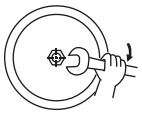 47-50 Nm

7.4 Magic 360 and XT2 urban grey drive wheels and Frontier V6/V4 urban drive wheels

Tyre Description	Magic Mobility Recommended Optimum Operating Pressures	Maximum Pressure According to Tyre Capacity
3.00-8 (14x3)	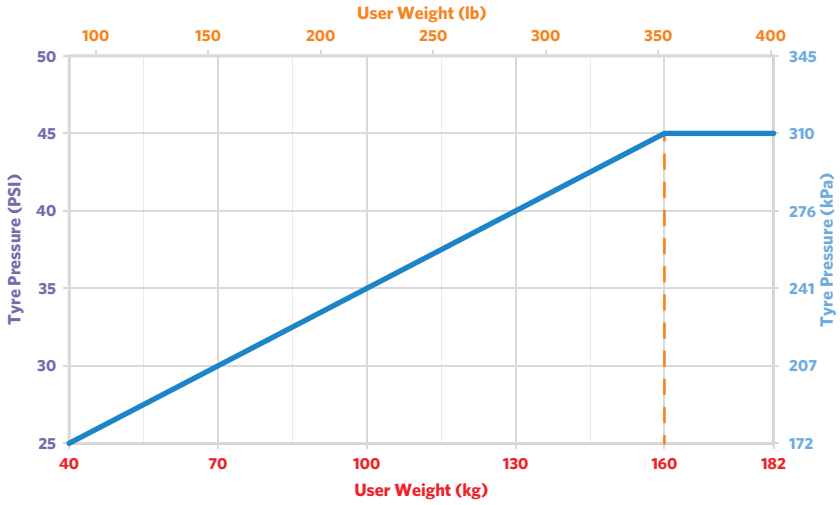	50 psi 345 kPa 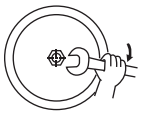 47-50 Nm

7.5 Magic 360 and XT2 urban black drive wheels

Tyre Description	Magic Mobility Recommended Optimum Operating Pressures	Maximum Pressure According to Tyre Capacity
3.00-8 (14x3)	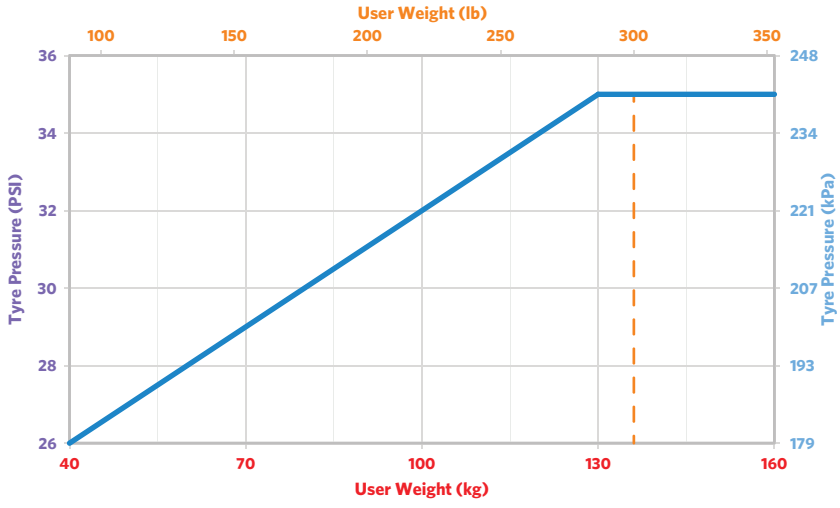	35 psi 241 kPa 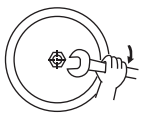 47-50 Nm

7.6 Frontier V6/V4 and Extreme X8 off-road drive wheels

Tyre Description	OFF-ROAD GUIDANCE CHART Magic Mobility Recommended Optimum Operating Pressures	Maximum Pressure According to Tyre Capacity
145/70-6	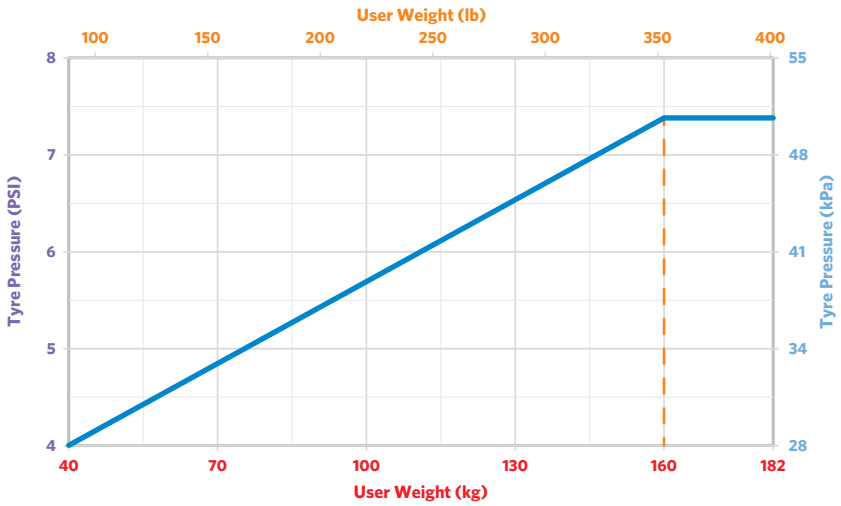	24 psi 165 kPa **Magic Mobility Recommended Optimum Operating Pressure for On-Road** 12 psi 83 kPa 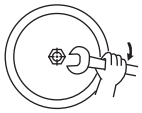 47-50 Nm

7.7 Frontier V6/V4 castor wheels

Tyre Description	Magic Mobility Recommended Optimum Operating Pressures	Maximum Pressure According to Tyre Capacity
2.80/2.50-4 (9x2.5) 200x50 (8x2) 	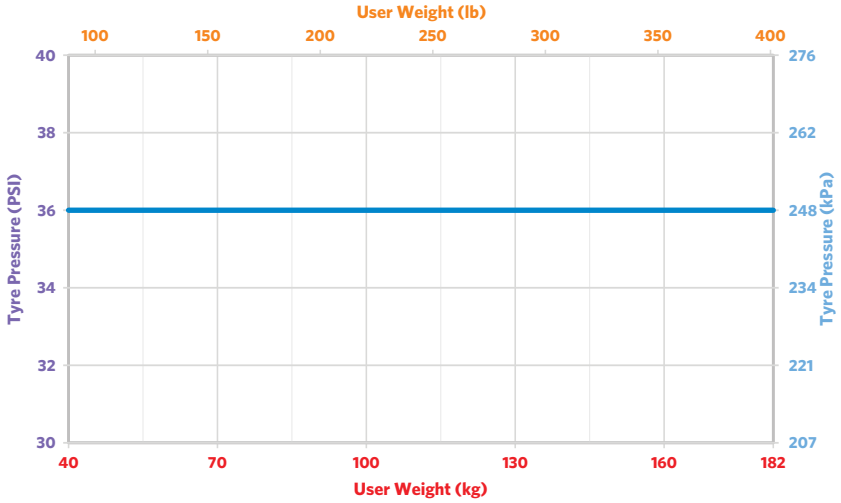	36 psi 248 kPa 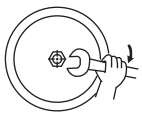 22-25 Nm

7.8 Tyre puncture repair

Tyre punctures can occur unfortunately. There are several precautions you can take to minimise this likelihood:

- Urban tyres only: Fit solid wheels, however, be aware that this can give a harsher ride but won't go flat
- Fit the Magic Mobility puncture resistant tyre liner kit (aramid fibre tyre liner + sealant) which are less likely to puncture. Please contact your Magic Mobility agent to have the kit fitted to your current wheels. The liners can then be switched into your new tyres when the time comes
- Install tyre sealant into the tubes
- Maintain correct tyre pressure and replace tyres when they are badly worn or cracked.

Punctures can be repaired by your Magic Mobility agent or most bicycle, ATV or car tyre outlets.

7.9 Tyre wear

Tyre life varies from months to years depending on your daily use. To achieve the most from your tyres it's important to have them correctly inflated. Always use manufacturer recommended parts and replace tyres when the tread pattern wears to less than 2mm deep as tyres will start to lose safe traction and become more prone to puncture.

7.10 Caring for the body kit

Your powerchair has a plastic body kit that can be easily wiped clean with a damp soft cloth and mild detergent. Never hose off or pressure clean your powerchair or place it in direct contact with water.

7.11 Caring for upholstery

Your powerchair upholstery can be cleaned with mild soap and water. It's important to always avoid water transgressing into any electrical components. Never use chemicals to clean a vinyl seat as this can cause the seat to become slippery or dry out and crack. A general purpose upholstery cleaner may be used on fabric covered parts.

Upholstery life may be affected by skin oils, sweat and certain medications. It's recommended that you replace upholstery if it's cracked, torn or has significant wear and tear. Worn fabric may increase the potential for fire hazard. Be aware that washing upholstery may also reduce the fabric's flame retardation quality.

7.12 Caring for the joystick

Your powerchair joystick and boot can be cleaned using a damp cloth with diluted detergent. The LCD screen can be cleaned with a soft, lint free, dry cloth.

- Never use Windex, scouring powder or solvent based cleanser. This will scratch the screen and remove the anti-glare coating
- The joystick is NOT waterproof.

7.13 Water warning

Avoid exposing your powerchair to any type of moisture where possible (rain, snow, mist, saltwater or wash). Such exposure can cause electrical and mechanical malfunctions and may cause the chair to prematurely rust. Refer to Section 7.14 regarding corrosion. If your powerchair meets water, it's important to dry it thoroughly with a towel and then allow to dry in a warm room for 10-12 hours. Always check the joystick operation and brakes before using your powerchair again. If there are doubts or inconsistencies with your powerchair please contact your Magic Mobility agent.

- Don't leave the powerchair in rain or a storm of any kind
- Never use the powerchair in a shower or leave it in a damp bathroom while showering.

Your powerchair has electric motors and must never be driven through water, into rivers, creeks and the sea.

7.14 Corrosion protection

Your powerchair has been manufactured using a range of processes that resist corrosion. All efforts have been made to ensure its long-term durability; however, we cannot guarantee that your powerchair will remain corrosion-free over its lifetime. Prevention, protection and regular maintenance are essential to reduce corrosion risk.

Powerchair corrosion is commonly caused by:

- Chips or scratches to paintwork caused by impact with rocks or other hard objects
- Accumulation of grit salt, dirt and moisture on the chassis components
- Exposure to highly corrosive environments such as the beach or near the coast and areas close to rivers and creeks.

Paintwork scratches and chips

If your powerchair chassis or any other steel components are scratched or chipped leaving the bare metal exposed, we recommend the following steps to repair the paintwork:

- Lightly sand the exposed area to remove any loose paint edges or chips. Ensure any surface corrosion has been removed in this process
- Apply cleaning solvent to the area to remove dust, impurities and oils
- Apply primer over the area that requires touching-up
- Once dry, apply touch-up paint and ensure it covers all exposed areas. Once dry the area should now be protected from further corrosion.

If it's impractical to perform these steps, apply a commercial rust converter/neutraliser product to help prevent the rust from spreading further.

Beaches, saltwater and coastal areas

- Saltwater and the surrounding environment are highly corrosive
- Exposure to coastal areas will also increase the likelihood of corrosion to your powerchair even if the chair is not used on the beach. Coastal air generally has a far higher salt content than inland areas. The highest coastal corrosion rates are generally within approximately 500 metres from the shoreline.

Snow and ice, salted roads and footpaths

Avoid using your powerchair on salted surfaces where possible as salt can detrimentally affect many powerchair components. If you drive your powerchair on wet, icy or salted surfaces, please see the preventative maintenance section below for further advice.

Cleaning after use

When your powerchair has been used in coastal, wet or salty environments extra cleaning is critical to reduce the risk of rust. After returning from your drive all powerchair parts should be wiped down with a warm water cloth. The powerchair should then be left in a warm and dry

environment to dry thoroughly. It may also help to blow as much sand and/or salt off as possible. **Never, ever hose down your powerchair.**

Preventative maintenance

For regular beach use or in salty environments, we suggest using an oil-based spray lubricant on motor axles, wheel axles, castor fork axles, tie rods, the steering lock (Extreme X8 only), and other moving parts across the powerchair. Your local agent can assist you, if required.

7.15 Storage

Store your Magic Mobility powerchair in a warm, dry environment. If you don't use your powerchair regularly, it's recommended that batteries are charged at least once a month. Always store your batteries fully charged.

If you are storing your powerchair for an extended time, please contact your Magic Mobility agent who can give you advice on disconnecting the batteries and blocking up the powerchair to avoid flat-spotting the tyres.

- Exposing the powerchair to excessive temperatures will affect battery life. Avoid storing the powerchair in extreme hot and cold environments
- After long periods in storage it's a good idea to have the powerchair inspected by your authorised agent. Please refer to Sections 7.16-7.19 for safety checks.

7.16 Daily checks

- Check the batteries are fully charged
- With the control system switched off, check that the joystick is not bent or damaged and that it returns to centre when released
- Ensure the joystick boot is not torn or cracked as water can enter. Also ensure that the electrical connection is secure. If the joystick boot becomes torn or cracked replace immediately.

7.17 Weekly checks

Test the electrical brakes on a level floor with at least one metre clear space around the powerchair. Then:

- Switch on the control system
- Check to ensure that after one second the battery gauge remains on or flashes slowly
- Push the joystick slowly forward until you hear the electrical brakes operate. The chair may start to move
- Immediately release the joystick. You must be able to hear each electrical brake operate within a few seconds
- Repeat the test three times, pushing the joystick backwards, left and right respectively
- Check tyre pressure is as per specification in Section 7.1
- Check tyres for wear. Inspect the frame and power positioning mechanisms for foreign bodies. Check around the motor and castor axles.

Checks	Daily	Weekly	Quarterly	Annually
Check joystick boot	✔			
Check that joystick returns to centre	✔			
Ensure brakes are operational		✔		
Check tyre inflation and inspect for wear		✔		
Check frame and base for foreign objects		✔		
Check that plugs and connections are secure			✔	
Check cables for wear			✔	
Check moving parts for wear			✔	
Inspect fasteners for looseness			✔	
Inspect upholstery for wear			✔	
Service by authorised agent				✔

7.18 Monthly checks

- If your powerchair is fitted with lights, indicators or seat adjustment actuators, check their operation
- While driving the actuators pay attention to new noise or vibrations which could indicate a problem
- Check that all electrical connectors are secure, properly mated and free from damage
- Check condition of all cables for damage
- Check that fasteners are tight. Pay attention to the joystick
- Inspect the upholstery as per Section 4.21.

7.19 Annual checks

It's highly recommended to service your powerchair annually. Take your powerchair to your Magic Mobility agent to ensure that correct functionality is maintained.

7.20 Servicing

Please contact your Magic Mobility agent to arrange servicing. Your agent can also discuss loan (rental) chair options during this time. Please note that many of our powerchairs are highly personalised and a loan (rental) chair may not be appropriate.

Always carry out your daily, weekly and monthly checks. If you notice symptoms such as excessive vibration, frayed harnesses, damaged connectors, uneven tyre wear, unusual motion, broken parts or anything else that may cause you concern between services, please contact your Magic Mobility agent immediately.

Control system set up/programming should only be performed by Magic Mobility authorised individuals/ agents. Final controller tuning adjustments may affect other functionality on your powerchair.

Reminder – don't modify or have your powerchair modified in ways that are not authorised by Magic Mobility.

When contacting your agent or Magic Mobility make sure that you have your powerchair model and serial number handy as this will make it easier for us to help you (see Section 2.3 for serial number location).

7.21 Hygiene measures when being reused

Prior to the wheelchair being re-used, it must be carefully prepared. All surfaces which come into contact with the user must be treated with a disinfection spray.

To do this, you must use a disinfectant as authorised/ recommended in your country, for rapid alcohol-based disinfection for medical products and medical devices, which must be disinfected quickly. Please take into account the manufacturer's instructions for the disinfectant you are using.

7.22 Disposal

Symbols below indicate that your product needs to be disposed of separately from household waste in accordance with local laws and regulations. When this product reaches the end of its life, take it to your local collection point as designated by local authorities. Separate collection and recycling of your product will help conserve natural resources and ensure that it's recycled in a manner that protects our environment.

Ensure you are the legal owner of the product prior to arranging for its disposal in accordance with the above recommendations and national requirements.

Special local disposal or recycling regulations may apply. These must be considered when disposing your powerchair. This may include cleaning or decontaminating your powerchair prior to disposal.

The following list may also be helpful:

Steel - frame, forks, legrest, armrest, under-seat positioning

Aluminium - wheels, Magic 360 front and rear arms

Aluminium and copper - motors

Lead - batteries

Plastic - covers, footplate

Packaging - plastic wrapping, cardboard

E-waste - charger, power module, seating module, controller, cables.

Disposal or recycling should be done using a licensed agent or authorised place of disposal. Alternatively, your powerchair may be returned to your agent for disposal.

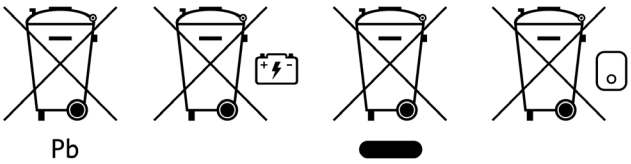

Joystick controls

8.1 LED joystick module

LED JOYSTICK TROUBLESHOOTING

If the problem persists after you have made the checks below, contact your authorised agent.
***If motor swap has been enabled, then the left and right references will need transposing.**

1		Battery needs charging or there is a bad connection to the battery. Check the battery connection. If connections are good, try charging the battery
2		Left hand motor* has a bad connection. Check the connections to the left hand motor
3		Left hand motor* has a short circuit to a battery connection. Contact your service agent
4		Right hand motor* has a bad connection. Check the connections to the right hand motor
5		Right hand motor* has a short circuit to a battery connection. Contact your service agent
6		Powerchair is being prevented from driving by an external signal. The exact cause will depend on your powerchair model
7		Joystick fault is indicated. Make sure that the joystick is in the centre position before switching control system on
8		Possible control system fault is indicated. Make sure that all connections are secure
9		Parking brakes have a bad connection. Check the parking brake and motor connections. Make sure the control system connections are secure
10		Excessive voltage has been applied to the control system. This is usually caused by poor battery connection. Check battery connections
7+ S		Communication fault is indicated. Make sure the joystick cable is securely connected and not damaged
ACTUATOR FLASH		Actuator trip is indicated. If more than one actuator is fitted, check which actuator is not working correctly. Check the actuator wiring

8.2 LCD joystick module

DIAGNOSTIC SCREEN

Diagnostic screen displays when the control safety circuits have operated to prevent the powerchair from moving. If the error is in a non-active module with a drive profile selected, then driving is still possible and diagnostic screen will appear intermittently.

A = trip code B = identified module C = trip text

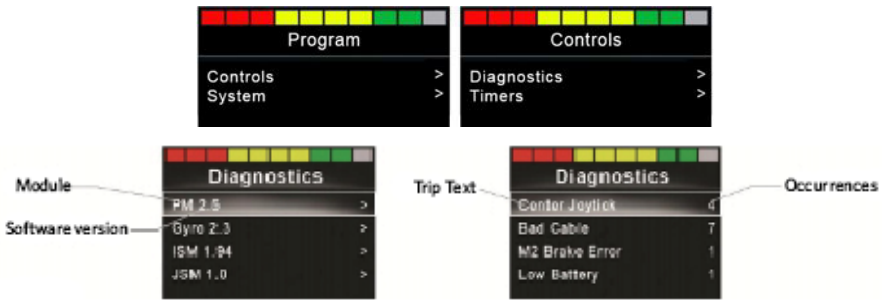

COMMON TROUBLESHOOTING		
CENTRE JOYSTICK	Cause	The most common cause of this trip is if joystick is deflected away from centre before and during the time it is switched on
	Solution	Ensure that the joystick is centred and turn the CJSM2 on and off
LOW BATTERY	Cause	Occurs when the CJSM2 detects that battery voltage has fallen below 16V
	Solution	Charge batteries
HIGH BATTERY VOLTAGE	Cause	Occurs when the CJSM2 detects that the battery voltage has risen above 35V
	Solution	Check the condition of batteries and connections to the CJSM2
BRAKE ERROR	Cause	Occurs when the CJSM2 detects a problem in the motor brakes or their connections
	Solution	Check the motor brakes are not disengaged (see Section 4.10)
MOTOR ERROR	Cause	Occurs when the CJSM2 detects that a motor has become disconnected
	Solution	Check the motors, cables and connections to the CJSM2
INHIBIT ACTIVE	Cause	Occurs when any of the inhibit inputs are active and in a latched state
	Solution	Cycle the power. This will drop out of latched mode and might clear the trip
		Lower you seat lift and retract your docking pin
		Check all wiring and switches connected to the inhibits
GONE TO SLEEP	Cause	Occurs when the CJSM2 has been left inactive for a time greater than set in sleep timer
	Solution	Turn the joystick on to "wake it up"
CHARGING	Cause	Occurs when the CJSM2 detects that a charger is connected to either inhibit 1 or inhibit 3. The battery charging screen will display during charger connection
	Solution	Disconnect the charger from the powerchair
BAD CABLE	Cause	Occurs when the CJSM2 detects a fault in the wiring between any of the modules
	Solution	Check all cables and connections for continuity and any possible pinch points
		If there is any visible damage to cables, contact your service agent to replace

8.3 Locking the control system

	The control system can be locked by either using a button sequence on the keypad or with a physical key. This will be set up at the factory.

KEYPAD LOCKING	KEY LOCKING
• While the control system is switched on, depress and hold the on/off button • After one second the control system will beep. Now release the on/off button • Deflect the joystick forwards until the control system beeps • Deflect the joystick in reverse until the control system beeps • Release the joystick, there will be a long beep • The powerchair is now locked and the padlock icon will be displayed the next time the control system is switched on.	With the control system switched on, insert and remove a PGDT supplied key into the charger socket on the joystick module. A short beep will be heard. The powerchair is now locked.
KEYPAD UNLOCKING	**KEY UNLOCKING**
• If the control system has switched off, press the on/off button • Deflect the joystick forwards until the control system beeps • Deflect the joystick in reverse until the control system beeps • Release the joystick, there will be a long beep • The powerchair is now unlocked.	With the control system switched on insert and remove a PGDT supplied key into the charger socket on the joystick module. A short beep will be heard. The powerchair is now unlocked.

Electromagnetic Interference EMI

CAUTION!

The standard version of your powerchair has been tested on the applicable requirements with respect to electromagnetic radiation (EMC requirements). Regardless of these tests it can't be excluded that electromagnetic radiation may influence the powerchair. For example:

- Mobile telephones
- Large-scale medical apparatus
- Other sources of electromagnetic radiation.

It can't be excluded that the powerchair may interfere with electromagnetic fields. For example:

- Shop doors
- Burglar alarm systems in shops
- Garage door openers.

In the unlikely event that such problems do occur please notify your authorised agent immediately.

DANGER!

- When operating two-way radio, walkie-talkies, CB radio, amateur radio, public mobile radio and other powerful transmitting devices, the powerchair should be brought to a halt and turned off
- The operation of cordless, mobile telephones, and cell phones including hands-free devices is permitted but if abnormal operation of the powerchair is encountered then the chair must be brought immediately to a halt and turned off.

Please also refer to the R-net, Omni2 and CJSM2 Owners' Manuals.

10

How does my powerchair measure up?

Two of the most common questions we receive are "*how big is my powerchair?*" and "how much does it weigh?".

All Magic Mobility powerchairs are made to measure, just for you, so it's not always a straightforward answer. But we'll do our best to help.

Taking measurements

Please note that in some instances the seat width may be wider than the base. Depending on your footplate position, the overall length of the powerchair may also vary. The instructions below will help you measure your chair.

Many hospitals have scales that can be used to weigh a powerchair. Alternatively, refer to our website for information that will help you calculate an approximate value.

Australia only

If you can visit Magic Mobility, we'll gladly weigh and measure your powerchair.

If the base is the widest, use the dimensions in section 11. If not, generally, the widest point is across the armrests.	Raise the backrest to the highest angle. Drive the powerchair until the footplate just touches the wall. Measure from the wall to the furthest point.	Measure from the floor up to the top of the headrest. Don't forget that when transporting, you can remove the headrest and adjust the back angle to reduce the dimension.
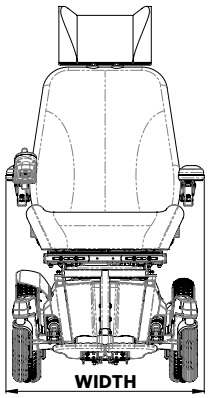	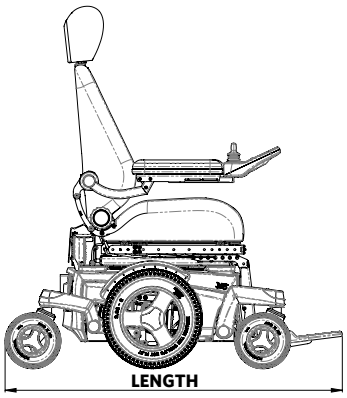	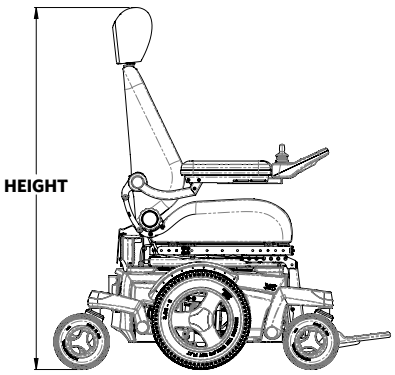

Technical specifications

Magic Mobility cannot provide technical specifications for non-Magic Mobility parts, nor can we guarantee performance according to the table below. If you can't see what you need please contact your agent or Magic Mobility.

UK CA	**As the manufacturer, Magic Mobility declares that the powered wheelchairs conform to the UK Medical Device Regulation 2002 No 618.**	CE	**As the manufacturer, Magic Mobility declares that the powered wheelchairs conform to the EU Medical Device Regulation 2017/745.**

STANDARD	DEFINITION / DESCRIPTION	TEST DUMMY WEIGHT (KG)							
		Magic 360	**Frontier V6** AT & Urban	**Frontier V6** Compact	**Frontier V4** RWD	**Frontier V4** FWD	**Extreme X8**	**XT2**	**XT4**
EN 12182: 2012 Class B	Assistive products for persons with disability - general requirements and test methods	160	182	182	182	182	182	136	182
EN 12184: 2022 Class B	Electrically powered powerchairs, scooters and their chargers - requirements and test methods	160	182	182	182	182	182	136	182
EN 12182: 2012 Class C	Assistive products for persons with disability - general requirements and test methods	160	182	N/A	N/A	N/A	182	136	182
EN 12184: 2014 Class C	Electrically powered powerchairs, scooters and their chargers - requirements and test methods	N/A	182	N/A	N/A	N/A	N/A	N/A	N/A
EN 12184: 2022 Class C	Electrically powered powerchairs, scooters and their chargers - requirements and test methods	160	N/A	N/A	N/A	N/A	182	136	182
ISO 7176-8: 2014	Requirements and test methods for impact, static and fatigue strengths	160	182	155	182	182	182	136	182
ISO 7176-19: 2008	Powerchairs - Part 19: Wheeled mobility devices for use as seats in motor vehicles	102						76	102

DESCRIPTION		SPECIFICATIONS
Maximum battery dimensions (l x w x h)	Magic 360 and Frontier	260 x 172 x 210 mm
	Extreme X8	307 x 172 x 220 mm
	XT2 and XT4	333 x 171 x 237 mm
Battery capacity* * Regional variations	Magic 360, Frontier and Extreme X8	70 Ah (C20)
	Extreme X8	90 Ah (C20)
	XT2 and XT4	115 Ah (C20)
Maximum permissible charging voltage		24V
Maximum charging current		12 A (rms)
Charging connector type		Controller, manual
Insulation		Class 2 double insulated

MAGIC 360			
	Model designation of powerchair tested: Magic 360, with Power Lift, Power Tilt, Centre Power Legrest and Anti-Shear Rehab Back. Specifications for some common options are included. All measurements assume a seat depth of 460x460 mm (18x18") and standard backrest heights. As each powerchair is built to order; variations to the information below are to be expected.		
DESCRIPTION		**MINIMUM**	**MAXIMUM**
Overall base length	Centre legrest	983 mm (footplate flipped)	1160 mm
	Centre power legrest	983 mm (footplate flipped)	1130 mm
	Swingaway legrest	983 mm (legrest removed)	1080 mm
	Swingaway power legrest	983 mm (legrest removed)	1125 mm
Minimum turning radius	Centre legrest	665 mm	
	Centre power legrest	640 mm	
	Swingaway legrest	615 mm	
	Swingaway power legrest	655 mm	
Overall base width	Off-road wheels	660 mm	
	Crossover wheels	635 mm	
	Urban wheels	610 mm	
NOTE: Depending on seat width, armrests can be wider than the base			
Seat to floor height at front not including cushion	Power lift and power tilt	435 mm	735 mm
	Power tilt	435 mm	
	Fixed seat	430 mm	
Total mass including centre power legrest and anti-shear rehab back	Power lift and power tilt	127 kg (no batteries)	173 kg (with batteries)
	Power tilt	119 kg (no batteries)	165 kg (with batteries)
	Fixed seat	103 kg (no batteries)	149 kg (with batteries)
Total weight influencers: batteries (set of 2)		46 kg	
Transport weight of the heaviest part (1 battery)		23 kg	
Static stability (CLASS B - worst case with lift and tilt)	Downhill / uphill / sideways	14° 9° 12°	
Static stability (CLASS C - worst case with tilt only)	Downhill / uphill / sideways	15°	
Dynamic stability uphill (CLASS B)		6°	
Dynamic stability uphill (CLASS C)		10°	
Energy consumption / Estimated range		35 km	
The following aspects have a negative influence on the range of action: obstacles, rugged terrain, driving on slopes, exposure to temperatures below freezing point and frequent use of powered seat options			
Climbing capability for obstacles		100 mm	
Min. braking distance at maximum speed		1.8 m	
Max speed forward		10 kph	
Ground clearance (base)		90 mm	

FRONTIER V6 AT, CROSSOVER AND URBAN

Frontier V6	Model designation of powerchair tested: Frontier V6 AT, with Power Lift, Power Tilt, Centre Legrest and MPS Backrest. Specifications for some common options are included. All measurements assume a seat depth of 460x460 mm (18x18") and standard backrest heights. As each powerchair is built to order; variations to the information below are to be expected.

DESCRIPTION		MINIMUM	MAXIMUM
Overall base length	Centre legrest	1050 mm (footplate flipped)	1165 mm
	Centre power legrest	1050 mm (footplate flipped)	1140 mm
	Swingaway legrest	1050 mm (legrest removed)	1165 mm
	Swingaway power legrest	1050 mm (legrest removed)	1235 mm
Minimum turning radius	Centre / centre power legrest	595 mm	
	Swingaway / swingaway power legrest	640 mm	
Overall base width	Off-road wheels	710 mm	
	Crossover wheels	700 mm	
	Urban wheels	695 mm	
NOTE: Depending on seat width, armrests can be wider than the base			
Seat to floor height at front not including cushion	Power lift and power tilt	435 mm	735 mm
	Power tilt	435 mm	
	Fixed seat	430 mm	
Total mass including centre power legrest and anti-shear rehab back	Power lift and power tilt	122 kg (no batteries)	168 kg (with batteries)
	Power tilt	114 kg (no batteries)	160 kg (with batteries)
	Fixed seat	98 kg (no batteries)	144 kg (with batteries)
Total weight influencers: batteries (set of 2)		46 kg	
Transport weight of the heaviest part (1 battery)		23 kg	
Static stability (worst case with lift and tilt)	Downhill / uphill / sideways	15°	
Dynamic stability uphill		10°	
Energy consumption / Estimated range		35 km	
The following aspects have a negative influence on the range of action: obstacles, rugged terrain, driving on slopes, exposure to temperatures below freezing point and frequent use of powered seat options			
Climbing capability for obstacles		120 mm	
Min. braking distance at maximum speed		1.8 m	
Max speed forward		10 kph	
Ground clearance (base)		90 mm	

FRONTIER V6 COMPACT (NOT AVAILABLE IN USA/CAN/EU)	
	Model designation of powerchair tested: Frontier V6 Compact, with Power Lift, Power Tilt, Centre Legrest and Rehab Backrest. Specifications for some common options are included. All measurements assume a seat depth of 460x460 mm (18x18") and standard backrest heights. As each powerchair is built to order; variations to the information below are to be expected.

DESCRIPTION		MINIMUM	MAXIMUM
Overall base length	Centre legrest	955 mm (footplate flipped)	1135 mm
	Centre power legrest	955 mm (footplate flipped)	1110 mm
	Swingaway legrest	955 mm (legrest removed)	1175 mm
	Swingaway power legrest	955 mm (legrest removed)	1175 mm
Minimum turning radius	Centre / centre power legrest	550 mm	
	Swingaway / swingaway power legrest	615 mm	
Overall base width	Urban wheels	655 mm	
NOTE: Depending on seat width, armrests can be wider than the base			
Seat to floor height at front not including cushion	Power lift and power tilt	435 mm	735 mm
	Power tilt	435 mm	
	Fixed seat	430 mm	
Total mass including centre power legrest and anti-shear rehab back	Power lift and power tilt	120 kg (no batteries)	166 kg (with batteries)
	Power tilt	112 kg (no batteries)	158 kg (with batteries)
	Fixed seat	96 kg (no batteries)	142 kg (with batteries)
Total weight influencers: batteries (set of 2)		46 kg	
Transport weight of the heaviest part (1 battery)		23 kg	
Static stability (worst case with lift and tilt)	Downhill / uphill / sideways	10°	
Dynamic stability uphill		6°	
Energy consumption / Estimated range		35 km	
The following aspects have a negative influence on the range of action: obstacles, rugged terrain, driving on slopes, exposure to temperatures below freezing point and frequent use of powered seat options			
Climbing capability for obstacles		70 mm	
Min. braking distance at maximum speed		1.8 m	
Max speed forward		10 kph	
Ground clearance (base)		85 mm	

FRONTIER V4 RWD	
	Model designation of powerchair tested: Frontier V4 RWD with Roller, Power Lift, Power Tilt, Centre Legrest and MPS Backrest. Specifications for some common options are included. All measurements assume a seat depth of 460x460 mm (18x18") and standard backrest heights. As each powerchair is built to order; variations to the information below are to be expected.

DESCRIPTION		MINIMUM	MAXIMUM
Overall base length	Centre legrest	1030 mm (footplate flipped)	1250 mm
	Centre power legrest	1060 mm (footplate flipped)	1245 mm
	Swingaway legrest	930 mm (legrest removed)	1210 mm
	Swingaway power legrest	930 mm (legrest removed)	1210 mm
Minimum turning radius	Centre / centre power legrest	940 mm	
	Swingaway / swingaway power legrest	915 mm	
Overall base width	Off-road wheels	710 mm	
	Crossover wheels	700 mm	
	Urban wheels	640 mm	
NOTE: Depending on seat width, armrests can be wider than the base			
Seat to floor height at front not including cushion	Power lift and power tilt	435 mm	735 mm
	Power tilt	435 mm	
	Fixed seat	430 mm	
Total mass including centre power legrest and anti-shear rehab back	Power lift and power tilt	123 kg (no batteries)	169 kg (with batteries)
	Power tilt	115 kg (no batteries)	161 kg (with batteries)
	Fixed seat	99 kg (no batteries)	145 kg (with batteries)
Total weight influencers: batteries (set of 2)		46 kg	
Transport weight of the heaviest part (1 battery)		23 kg	
Static stability (worst case with lift and tilt)	Downhill / uphill / sideways	10°	
Dynamic stability uphill		6°	
Energy consumption / Estimated range		35 km	
The following aspects have a negative influence on the range of action: obstacles, rugged terrain, driving on slopes, exposure to temperatures below freezing point and frequent use of powered seat options			
Climbing capability for obstacles		70 mm	
Min. braking distance at maximum speed		1.9 m	
Max speed forward		10 kph	
Ground clearance (base)		85 mm	

FRONTIER V4 FWD	
	Model designation of powerchair tested: Frontier V4 FWD, with Power Lift, Power Tilt, Centre Legrest and MPS Backrest. Specifications for some common options are included. All measurements assume a seat depth of 460x460 mm (18x18") and standard backrest heights. As each powerchair is built to order; variations to the information below are to be expected.

DESCRIPTION		MINIMUM	MAXIMUM
Overall base length	Centre legrest	995 mm (footplate flipped)	1125 mm
	Centre power legrest	995 mm (footplate flipped)	1090 mm
	Swingaway legrest	995 mm (legrest removed)	1130 mm
	Swingaway power legrest	995 mm (legrest removed)	1130 mm
Minimum turning radius	Centre / centre power legrest	660 mm	
	Swingaway / swingaway power legrest	660 mm	
Overall base width	Off-road wheels	710 mm	
	Crossover wheels	700 mm	
	Urban wheels	640 mm	
NOTE: Depending on seat width, armrests can be wider than the base			
Seat to floor height at front not including cushion	Power lift and power tilt	435 mm	735 mm
	Power tilt	435 mm	
	Fixed seat	430 mm	
Total mass including centre power legrest and anti-shear rehab back	Power lift and power tilt	124 kg (no batteries)	170 kg (with batteries)
	Power tilt	116 kg (no batteries)	162 kg (with batteries)
	Fixed seat	100 kg (no batteries)	146 kg (with batteries)
Total weight influencers: batteries (set of 2)		46 kg	
Transport weight of the heaviest part (1 battery)		23 kg	
Static stability (worst case with lift and tilt)	Downhill / uphill / sideways	10°	
Dynamic stability uphill		6°	
Energy consumption / Estimated range		35 km	
The following aspects have a negative influence on the range of action: obstacles, rugged terrain, driving on slopes, exposure to temperatures below freezing point and frequent use of powered seat options			
Climbing capability for obstacles		80 mm	
Min. braking distance at maximum speed		1.9 m	
Max speed forward		10 kph	
Ground clearance (base)		90 mm	

EXTREME X8

Extreme X8	Model designation of powerchair tested: Extreme X8, with Power Lift, Power Tilt, Centre Legrest and Rehab Backrest. Specifications for some common options are included. All measurements assume a seat depth of 460x460 mm (18x18") and standard backrest heights. As each powerchair is built to order; variations to the information below are to be expected.

DESCRIPTION		MINIMUM	MAXIMUM
Overall base length	Centre legrest	1030 mm (footplate flipped)	1240 mm
	Centre power legrest	1030 mm (footplate flipped)	1200 mm
	Swingaway legrest	1030 mm (legrest removed)	1175 mm
	Swingaway power legrest	1030 mm (legrest removed)	1175 mm
Minimum turning radius	Centre legrest	1415 mm	
	Centre power legrest	1430 mm	
	Swingaway / swingaway power legrest	1470 mm	
Overall base width	Off-road wheels	700 mm	
NOTE: Depending on seat width, armrests can be wider than the base			
Seat to floor height at front not including cushion	Power lift and power tilt	470 mm	770 mm
	Power tilt	470mm	
	Fixed seat	465mm	
Total mass including centre power legrest and anti-shear rehab back	Power lift and power tilt	122 kg (no batteries)	168 kg (with 70 Ah batteries)
	Power tilt	114 kg (no batteries)	160 kg (with 70 Ah batteries)
	Fixed seat	98 kg (no batteries)	144 kg (with 70 Ah batteries)

DESCRIPTION		70 AH	90 AH
Total weight influencers: batteries (set of 2)		46 kg	52 kg
Transport weight of the heaviest part (1 battery)		23 kg	26 kg
Static stability - (worst case with lift and tilt)	Downhill / uphill / sideways	15°	
Dynamic stability uphill		10°	
Energy consumption / Estimated range		20-28 km	25-35 km
The following aspects have a negative influence on the range of action: obstacles, rugged terrain, driving on slopes, exposure to temperatures below freezing point and frequent use of powered seat options			
Climbing capability for obstacles		120 mm	
Min. braking distance at maximum speed		1.7 m	
Max speed forward		10 kph	
Ground clearance (base)		100 mm	

XT2 (NOT AVAILABLE IN USA/CAN)

magic XT2	Model designation of powerchair tested: XT2, with Power Lift, Power Tilt, Centre Legrest and Rehab Backrest. Specifications for some common options are included. All measurements assume a seat depth of 460x460 mm (18x18") and standard backrest heights. As each powerchair is built to order; variations to the information below are to be expected.

DESCRIPTION		MINIMUM	MAXIMUM
Overall base length	Centre legrest	1110 mm	1200 mm
	Centre power legrest	1110 mm	1190 mm
	Swingaway legrest	1110 mm	1280 mm
	Swingaway power legrest	1110 mm	1280 mm
Minimum turning radius	Centre legrest	1750 mm	
	Centre power legrest	1750 mm	
	Swingaway / swingaway power legrest	1800 mm	
Overall base width	Urban wheels	685 mm	
NOTE: Depending on seat width, armrests can be wider than the base			
Seat to floor height at front not including cushion	Power lift and power tilt	480 mm	780 mm
	Power tilt	480 mm	
	Fixed seat	480 mm	
Total mass including centre power legrest and anti-shear rehab back	Power lift and power tilt	150 kg (no batteries)	212 kg (with batteries)
	Power tilt	145 kg (no batteries)	207 kg (with batteries)
	Fixed seat	130 kg (no batteries)	192 kg (with batteries)
Total weight influencers: batteries (set of 2)		62 kg	
Transport weight of the heaviest part (1 battery)		31 kg	
Static stability - (worst case with lift and tilt)	Downhill / uphill / sideways	15°	
Dynamic stability uphill		10°	
Energy consumption / Estimated range* * Regional variations		58 km	
The following aspects have a negative influence on the range of action: obstacles, rugged terrain, driving on slopes, exposure to temperatures below freezing point and frequent use of powered seat options			
Climbing capability for obstacles		120 mm	
Min. braking distance at maximum speed		2.1 m	
Max speed forward		10 kph	
Ground clearance (base)		100 mm	

XT4

magic XT4	Model designation of powerchair tested: XT4, with Power Lift, Power Tilt, Centre Legrest and Rehab Backrest. Specifications for some common options are included. All measurements assume a seat depth of 460x460 mm (18x18") and standard backrest heights. As each powerchair is built to order; variations to the information below are to be expected.

DESCRIPTION		MINIMUM	MAXIMUM
Overall base length	Centre legrest	1040 mm	1240 mm
	Centre power legrest	1040 mm	1170 mm
	Swingaway legrest	1000 mm	1240 mm
	Swingaway power legrest	1000 mm	1240 mm
Minimum turning radius	Centre legrest	1410 mm	
	Centre power legrest	1410 mm	
	Swingaway / swingaway power legrest	1500 mm	
Overall base width	Off-road wheels	700 mm	
NOTE: Depending on seat width, armrests can be wider than the base			
Seat to floor height at front not including cushion	Power lift and power tilt	480 mm	780 mm
	Power tilt	480 mm	
	Fixed seat	480 mm	
Total mass including centre power legrest and anti-shear rehab back	Power lift and power tilt	158 kg (no batteries)	220 kg (with batteries)
	Power tilt	153 kg (no batteries)	215 kg (with batteries)
	Fixed seat	138 kg (no batteries)	200 kg (with batteries)
Total weight influencers: batteries (set of 2)		62 kg	
Transport weight of the heaviest part (1 battery)		31 kg	
Static stability - (worst case with lift and tilt)	Downhill / uphill / sideways	15°	
Dynamic stability uphill		10°	
Energy consumption / Estimated range* * Regional variations		35 km	
NOTE: To meet the Class C theoretical range requirement of 35km, the C5 rate of the batteries must be more than 83AH.			
The following aspects have a negative influence on the range of action: obstacles, rugged terrain, driving on slopes, exposure to temperatures below freezing point and frequent use of powered seat options			
Climbing capability for obstacles		120 mm	
Min. braking distance at maximum speed		2.1 m	
Max speed forward		10 kph	
Ground clearance (base)		100 mm	

ALL MODELS

Specifications for some common options are included. All measurements assume a seat depth of 460x460 mm (18x18″) and standard backrest heights. As each powerchair is built to order; variations to the information below are to be expected.

DESCRIPTION		MINIMUM	MAXIMUM
Seat plane angle	Lift and tilt	0°	50°
	Tilt only	0°	50°
	Fixed seat	0°	0°
Effective seat width	MPS seat/back/headrest	405 mm (16″)	560 mm (22″)
	Rehab seat/back/headrest	305 mm (12″)	560 mm (22″)
Effective seat depth	MPS seat/back/headrest	405 mm (16″)	560 mm (22″)
	Rehab seat/back/headrest	305 mm (12″)	560 mm (22″)
Backrest angle	MPS seat	90°	170°
	MPS power recline	96°	150°
	Fixed rehab canes	90°	105°
	Manual recline canes	90°	170°
	Powered canes	90°	160°
	Powered anti-shear canes	90°	155°
Backrest height	MPS seat (seat pan to top of back cushion)	600 mm	700 mm
	Rehab seat (seat pan to top of canes)	560 mm	700 mm
Footplate to seat distance	Centre legrest	300 mm	390 mm
	Centre power legrest	300 mm	390 mm
	Swingaway legrest	300 mm	390 mm
	Swingaway power legrest	300 mm	390 mm
Armrest to seat distance	Standard armrests	240 mm	390 mm
	Flexi armrests	220 mm	390 mm
Leg to seat angle	Centre legrest	92°	110°
	Centre power legrest	92°	180°
	Swingaway legrest (all)	92°	180°

Magic Mobility
3 International Court
Scoresby, Vic 3179
Australia
Tel +61 (0)3 8791 5600
enquiries@magicmobility.com.au
www.magicmobility.com.au

Sunrise Medical Limited
Thorns Road
Brierley Hill
West Midlands, DY6 2LD
United Kingdom
Tel + (44) (0) 845 605 6688
Fax +(44) (0) 845 605 6689
Email: enquiries@sunmed.co.uk

UK RP

Sunrise Medical S.r.l.
Via Riva, 20 – Montale
29122 Piacenza
Italia
Tel +39 0523 573111
Fax +39 0523 570060
www.SunriseMedical.it

Sunrise Medical AG
Erlenauweg 17
CH-3110 Münsingen
Schweiz/Suisse/Svizzera
Fon +41 (0)31 958 3838
www.SunriseMedical.ch

CH REP

Sunrise Medical (US) LLC
North American Headquarters
12002 Volunteer Blvd.
Mount Juliet, TN 37122
United States of America
Tel +1 800 333 4000
Fax +1 800 300 7502
www.sunrisemedical.com

Sunrise Medical Canada Inc
1000 Creditstone Rd., Unit #2
Concord, ON, L4K 4P8
Canada
Tel + 1 800 263 3390
Fax + 1 800 561 5834
cscanada@sunmed.com
www.sunrisemedical.ca

Sunrise Medical AS
Delitoppen 3
1540 Vestby
Norge
Tel +47 66 96 38 00
Fax +47 66 96 38 80
post@sunrisemedical.no
www.sunrisemedical.no

Sunrise Medical AB
Neongatan 5
431 53 Mölndal
Sweden
Tel +46 (0)31 748 37 00
post@sunrisemedical.se
www.sunrisemedical.se

Sunrise Medical GmbH
Kahlbachring 2-4
69254 Malsch/Heidelberg
Deutschland
Tel +49 (0) 7253/980-0
Fax +49 (0) 7253/980-222
www.SunriseMedical.de

EC REP

All Terrain Wheelchairs
Unit A1, Dawley Bank Workshops
Telford, Shropshire TF4 2BA
United Kingdom
Tel +44 (0) 01952 471 255
info@allterrainwheelchairs.co.uk
www.allterrainwheelchairs.co.uk

Sunrise Medical S.L.
Polígono Bakiola, 41
48498 Arrankudiaga – Vizcaya
España
Tel +34 (0) 902142434
Fax +34 (0) 946481575
www.SunriseMedical.es

Sunrise Medical Poland
Sp. z o.o.
ul. Elektronowa 6,
94-103 Łódź
Polska
Telefon + 48 42 275 83 38
Fax + 48 42 209 35 23
pl@sunrisemedical.de
www.Sunrise-Medical.pl

Sunrise Medical S.A.S
ZAC de la Vrillonnerie
17 Rue Mickaël Faraday
37170 Chambray-Lès-Tours
France
Tel + 33 (0) 247554400
www.sunrisemedical.fr

MEDICCO s.r.o.
H – Park, Heršpická 1013/11d,
625 00 Brno
Czech Republic
Tel +42 (0)547 250 955
Fax +42 (0)547 250 956
Bezplatná linka 800 900 80
info@medicco.cz
www.medicco.cz 9

Sunrise Medical ApS
Showroom/Teknisk service:
Sindalsvej 9
8240 Risskov
Denmark
Tel + 45 70 22 43 49
info@sunrisdemedical.dk
www.sunrisemedical.dk

Sunrise Medical Japan Co., Ltd.
1-456 Maguchi, Kazo City, Saitama prefecture,
349-1145, Japan
Tel + 81 480 31 6480
www.sunrisemedical.jp

Bauerfeind
Dolenjska cesta 242b
1000 Ljubljana
Slovenia
Tel +386 (0) 1 42 72 941
info@bauerfeind.si
www.bauerfeind.si

Healthcare 21
Unit 5, Westpoint Buildings
Westpoint Business Park
Ballincollig Cork
Ireland
Tel +44 (0) 1890 777 444
www.healthcare21.eu

Middle East
international@sunrisemedical.de

Berner Oy
Hitsaajankatu 24,
00810 Helsinki
Finland
Tel +358 20 791 00
info@berner.fi
www.berner.fi

Wheel
47, Grigoriou Lampraki Str.
543 51 Thessaloniki
Greece
Tel +30 2310 900 443
info@wheel.gr
www.wheel.gr

Slaugivita
Dubijos g 16
77172 Šiauliai
Lithuania
Tel + 370 41 522439
pardavimai@slaugivita.com
www.slaugvita.com

Rehab Zrt
2000 Szentendre
Kalászi út 3
Hungary
Tel +36 26 886 288
www.rehabrt.hu

Medifab
22 Detroit Drive
Rolleston 7675
New Zealand
Tel +64 3 307 9790
solutions@medifab.com
www.medifab.com

CE Mobility
67 Richard Road
Industria North
Maraisburgb, Gauteng
South Africa
Tel +010 593 2903
richard@cemobility.co.za
www.cemobility.co.za

Kappamed
9 Sveti Sedmochislenitsi Str.,
Lozenets 1421,
Sofia
Bulgaria
Tel +359877934377
info@kappamed.com
www.kappamed.com

Letmo SK, s.r.o.
Medeny Hamor 14602/5
Banska Bystrica 97401
Slovakia
Tel +421800194984
info@letmo.sk
www.letmo.sk

Bauerfeind d.o.o.
Goleška 20, HR - 10020
Zagreb
Hrvatska
Tel +385/1 6542 855
info@bauerfeind.hr
www.bauerfeind.hr

Medical Express
Strada Constituţiei 24 550253
Sibiu
Romania
Tel +40 31 433 6105
office@medicalexpress.ro
www.medicalexpress.ro